STAND-UP RIDER

TOYOTA MATERIAL HANDLING

3000 – 5000 LBS.

SPECIFICATIONS

SR1-BEF30-40 | SR1-BET30-40 | SR1-HPF30-50 | SR1-HPT30-50 | SR1-HPM30-50

CLASS 1

ELECTRIC MOTOR RIDERS

ToyotaForklift.com

CAPACITY	LOAD CENTER	MAXIMUM FORK HEIGHT
3000 - 5000 LBS.	24 IN.	270 IN.

INDUSTRIES

- Beverage
- Factory
- Food Storage
- General Warehousing
- Cold Storage
- Food Processing
- General Manufacturing
- Retail

STANDARD FEATURES

PERFORMANCE

- 36 Volt Electrical System
- AC Induction Drive Motor
- Transistor Control System with MOSFET
- AC Induction Hydraulic Motor[1]
- DC Lift Motor[2]
- Independent Lift & Steer Motors
- Dual Rubber Steer Tires[2]
- Dual Polyurethane Steer Tires (18.5" and 21.25" BC)[1]
- Low Durometer Smooth Rubber Drive Tires
- Programmable Performance Parameters
- Power Hook-Up for Onboard Terminal, 10 Amp
- Multifunction Digital Display
- UL "E" Construction
- Mast Tilt (3° fwd / 5° bwd)

OPERABILITY

- Multifunction Control Handle (Single-Axis, Simultaneous Function)
- Hydrostatic Power Steering
- Auto-Off System
- Ventilated Tractor Compartment
- 2-Post Overhead Guard
- Auto-Position Hold (Drive Motor/ Brake Hold)
- Anti-Stall Protection
- High Visibility Mast & Overhead Guard
- Dual Electric Disc Brakes (Self-Adjusting)
- Regenerative Plugging
- Proportional Plugging
- 48" Load Backrest Extension
- Integral Sideshift (4" Each Way)

ERGONOMICS

- Spacious Operator Compartment
- Flexible Sidestance Operator Compartment
- 7/8" Thick Bubble Cushioned Floor Mat
- Ergonomically Sloped Floorboard
- Comfort Ride Suspension Floor[3]
- Cushioned Padded Backrest & Armrest
- Low-Effort Brake Pedal
- Low Step Height
- Integrated Clipboard, Amenity Tray & Cup Holder

SERVICEABILITY

- One-Piece Top Cover
- Self-Diagnostics (With Instructional Messages)
- Built-In Analyzer
- Fault Code Memory
- Programmable Maintenance Indicator
- Battery Compartment Rollers (Corrosion Resistant)
- Battery Retaining Gates
- Vertically Mounted Drive Motors
- Reverse Polarity Protection
- Anti-Static Ground Strap
- Flashware Enabled Software
- Battery Connector - SB350 Gray
- No Directional Contactors
- Multifunctional Hour Meters
- Battery Discharge Indicator (With Lift Interrupt)
- Maintenance Indicator
- Temperature Indicator

1 Standard on SR1-HP models only.
2 Standard on SR1-BE models only.
3 Standard on SR1-HP models only. Optional on SR1-BE models.

OPTIONAL EQUIPMENT

LOAD HANDLING

- Full-Free Lift Two-Stage Mast (FV)
- Full-Free Lift Three-Stage Mast (FSV)[2]
- Full-Free Lift Three-Stage Mast (FSW)[1]
- Full-Free Lift Four-Stage Mast (QFV)[1]
- Mast Tilt, (5° fwd / 3° bwd)
- Fixed Carriage (removes sideshift)
- Battery Gate Interlock (remove from this section, it is in the battery section)
- Hydraulic Quick Disconnects (Single)[1]
- Hydraulic Quick Disconnects (Dual)[1]

LOAD HANDLING (HOSE & VALVE ASSEMBLY) w/ SIDESHIFT

- Integral Sideshift (Lift-Tek) with 1 Auxiliary Function (Internal Reeving)
- Integral Sideshifting Fork Positioner[1]

LOAD HANDLING (HOSE & VALVE ASSEMBLY) w/out SIDESHIFT

- 1 Auxiliary Function (Fixed Carriage only) (Internal Reeving)
- 2 Auxiliary Functions (Fixed Carriage only) (Internal Reeving)

FORKS

- Various Fork Length Options
- Forks - Delete from Truck

BODY

- Various Load Backrest Options
- Various Overhead Guard Height Options
- OHG Cover Mesh Cover

LIGHTS, INDICATORS & MISC.

- Various Travel Alarm Options
- Various Strobe Light Options
- LED Work Lights (Mast Mounted)
- LED Rear Work Light
- LED Operator Compartment Light
- Blue Spot Light, Key-on, Tractor First Only
- Blue Spot Light, Key-on, Both Directions
- Capacity Plate for Field Installed Attachments
- Extended Operator Compartment Backrest
- Remove Comfort Ride Suspension Floor[1]
- Variable Flow, Analog Control Handle[1]
- Reverse Steering
- Lift Limit Switch with Bypass[1]
- Travel Speed Limit Above Freelift[1]
- Auto Fork Leveling (Both Directions)[1]
- Compartment Sensor System (CSS)
- Compartment Sensor System (CSS) for Cold Storage
- Hinged Rear Operator Guard (full length)
- Various RF Bracket Options
- Relocated Tiller Arm
- Operator Compartment Fan
- Electronic Horn
- Fire Extinguisher - 2.5 lb. Dry Chemical
- Digital Load Weight Display
- Electronic Key (Operator PIN Code Entry)
- Keyless on/off switch (in lieu of key switch)

BATTERY ACCESSORIES

- Battery Side Gate Interlock Switches (limits travel speed to 1 MPH)
- Dual Battery Connector Configuration for Fast Charge System
- Various Battery Connector Options
- Various Battery Spacer Options[1]
- Various lithium ion batteries approved for use

WHEELS AND TIRES

- Various Drive Tire Options
- Various Steer Tire Options

SPECIAL MODELS

- UL Type “E” Rating
- UL Type “EE” Rating[1]
- Cold Storage Conditioning
- Special Paint Color

1 Available on SR1-HP models only.
2 Available on SR1-BE models only.
Optional equipment and features may vary by model and configuration, and may not be appropriate for all applications and circumstances. Please contact your local, authorized Toyota Dealer for a complete list of available options and review the Features Brochure for a more thorough discussion on the appropriate applications for many of these options.

TRUCK SPECIFICATIONS

MODEL NUMBERS

GENERAL DATA			SR1-BEF30			SR1-BET30		
Load Capacity		lb (kg)	3000 (1361)			3000 (1361)		
Load Center		in (mm)	24 (600)			24 (600)		
Battery Compartment Size		in.	13.5	16.5	18.5	13.5	16.5	18.5
Power Type			Battery			Battery		
Operator Position			Stand-Up			Stand-Up		

EXTERIOR DIMENSIONS			SR1-BEF30 BATTERY COMPARTMENT SIZE 13.5"	16.5"	18.5"	SR1-BET30 BATTERY COMPARTMENT SIZE 13.5"	16.5"	18.5"
A	Maximum Fork Height (MFH)	in (mm)	140 (3556)			227 (5766)		
B	Free Lift	in (mm)	40 (1016)			48 (1219)		
C	Tilt Range (forward / backward)	degrees	3/5			3/5		
D	Mast Lowered Height	in (mm)	89 (2261)			99 (2515)		
E	Mast Extended Height	in (mm)	185 (4699)			275 (6985)		
F	Battery Roller Height	in (mm)	7.5 (191)			7.5 (191)		
G	Load Backrest Height	in (mm)	48 (1219)			48 (1219)		
H	Overhead Guard Height[2]	in (mm)	88 (2235)			88 (2235)		
I	Chassis Height	in (mm)	50.2 (1275)			50.2 (1275)		
J	Chassis Width	in (mm)	41 (1041)			41 (1041)		
K	Wheelbase	in (mm)	45.3 (1151)	48.1 (1222)	50.1 (1273)	45.3 (1151)	48.1 (1222)	50.1 (1273)
L	Load Distance[1]	in (mm)	12.7 (323)			12.7 (323)		
M	Length to Fork Face[1]	in (mm)	66.3 (1684)	69.1 (1755)	71.1 (1806)	66.3 (1684)	69.1 (1755)	71.1 (1806)
N	Underclearance	in (mm)	4.12 (102)	4.12 (102)	3.87 (98)	4.12 (102)	4.12 (102)	3.87 (98)
O	Overall Width	in (mm)	41 (1041)			41 (1041)		
P	Fork Size	in (mm)	42 x 1.5 x 4 (1067 x 38 x 102)			42 x 1.5 x 4 (1067 x 38 x 102)		
Q	Fork Spread (outer edge to edge) L x T x W	in (mm)	8 / 37 (203 / 940)			8 / 37 (203 / 940)		
R	Outside Turning Radius Maximum / Maximum	in (mm)	52.7 (1339)	55.5 (1410)	57.5 (1461)	52.7 (1339)	55.5 (1410)	57.5 (1461)
	Basic Right Angle Stacking Aisle Width[1]	in (mm)	66.3 (1684)	69.1 (1755)	71.1 (1800)	66.3 (1684)	69.1 (1755)	71.1 (1800)
	Carriage Width	in (mm)	37 (940)			37 (940)		
	Step Height	in (mm)	8 (203)			8 (203)		

PERFORMANCE DATA			SR1-BEF30 BATTERY COMPARTMENT SIZE 13.5"	16.5"	18.5"	SR1-BET30 BATTERY COMPARTMENT SIZE 13.5"	16.5"	18.5"
Travel Speed	Maximum	mph (km/h)	7.2 (11.6)			7.2 (11.6)		
Gradeability	Full Load	%	15			15		
Grade Clearance		%	36	35	33	36	35	33

TRUCK WEIGHTS			SR1-BEF30 BATTERY COMPARTMENT SIZE 13.5"	16.5"	18.5"	SR1-BET30 BATTERY COMPARTMENT SIZE 13.5"	16.5"	18.5"
Total Weight	Without Battery	lb (kg)	6330 (2871)	5710 (2590)	5740 (2604)	6721 (3049)	6101 (2767)	6131 (2781)

TIRES				SR1-BEF30 BATTERY COMPARTMENT SIZE 13.5"	16.5"	18.5"	SR1-BET30 BATTERY COMPARTMENT SIZE 13.5"	16.5"	18.5"
Tires	Tire Type	Front / Rear		Solid Rubber / Solid Rubber	Solid Rubber / Solid Rubber	Solid Rubber / Polyurethane	Solid Rubber / Solid Rubber	Solid Rubber / Solid Rubber	Solid Rubber / Polyurethane
	Number (x = driven)	Front / Rear		2x / 2 (dual steer)			2x / 2 (dual steer)		
	Lifting	Front (Drive)	in (mm)	16.25 x 6 x 11.25 (413 x 152 x 286)			16.25 x 6 x 11.25 (413 x 152 x 286)		
		Rear (Steer)	in (mm)	10 x 5 x 6.5 (254 x 127 x 165) (Dual)			10 x 5 x 6.5 (254 x 127 x 165) (Dual)		
Brake Pedal				Plugging / Electric Disc Brake			Plugging / Electric Disc Brake		

POWER SYSTEM				SR1-BEF30 BATTERY COMPARTMENT SIZE 13.5"	16.5"	18.5"	SR1-BET30 BATTERY COMPARTMENT SIZE 13.5"	16.5"	18.5"
Battery Type				Lead Acid			Lead Acid		
Battery (6-hour ratings)	Compartment Size (W x L x H)	Maximum	in (mm)	38.5 x 13.75 x 32.3 (978 x 349 x 820)	38.5 x 16.5 x 32.3 (978 x 419 x 820)	38.5 x 18.5 x 32.3 (978 x 470 x 820)	38.5 x 13.75 x 32.3 (978 x 349 x 820)	38.5 x 16.5 x 32.3 (978 x 419 x 820)	38.5 x 18.5 x 32.3 (978 x 470 x 820)
	Voltage / Capacity	Maximum	V/AH	36 / 800	36 / 930	36 / 1085	36 / 800	36 / 930	36 / 1085
	Battery Size (W x L x H)	Maximum	in (mm)	38.5 x 13.5 x 32.3 (978 x 343 x 820)	38.5 x 16.3 x 32.3 (978 x 414 x 820)	38.5 x 18.3 x 32.3 (978 x 465 x 820)	38.5 x 13.5 x 32.3 (978 x 343 x 820)	38.5 x 16.3 x 32.3 (978 x 414 x 820)	38.5 x 18.3 x 32.3 (978 x 465 x 820)
	Weight	Minimum	lb (kg)	1700 (771)	1980 (898)	2300 (1043)	1700 (771)	1980 (898)	2300 (1043)
Motors	Drive			4 Pole Induction AC 3-Phase			4 Pole Induction AC 3-Phase		
			hp (kw)	7.0 (5.2)			7.0 (5.2)		
	Load Handling (Hydraulic)			DC			DC		
			hp (kw)	14.1 (10.5)			14.1 (10.5)		
	Hydrostatic Power Steering			Permanent Magnet DC			Permanent Magnet DC		
Control Type	Drive			Transistor - MOSFET			Transistor - MOSFET		
	Load Handling			Transistor - MOSFET			Transistor - MOSFET		
	Power Steering			Contactor			Contactor		
Operating Pressure		For Attachments	psi (kg / cm²)	2200			2200		
Auxiliary Flow Rate (3rd function)			gpm	2.5			2.5		
Auxiliary Flow Rate (4th function)			gpm	3 - 7			3 - 7		

1 Includes integral sideshift. Subtract 0.9 inches (23mm) for fixed carriage with no sideshift.
2 Overhead guard height tolerance is 0.5 inch.

MODEL NUMBERS

GENERAL DATA				SR1-BEF35			SR1-BET35		
Load Capacity			lb (kg)	3500 (1588)			3500 (1588)		
Load Center			in (mm)	24 (600)			24 (600)		
Battery Compartment Size			in.	13.5	16.5	18.5	13.5	16.5	18.5
Power Type				Battery			Battery		
Operator Position				Stand-Up			Stand-Up		
EXTERIOR DIMENSIONS				**SR1-BEF35 BATTERY COMPARTMENT SIZE**			**SR1-BET35 BATTERY COMPARTMENT SIZE**		
				13.5"	16.5"	18.5"	13.5"	16.5"	18.5"
A	Maximum Fork Height (MFH)		in (mm)	140 (3556)			227 (5766)		
B	Free Lift		in (mm)	40 (1016)			48 (1219)		
C	Tilt Range (forward / backward)		degrees	3/5			3/5		
D	Mast Lowered Height		in (mm)	89 (2261)			99 (2515)		
E	Mast Extended Height		in (mm)	185 (4699)			275 (6985)		
F	Battery Roller Height		in (mm)	7.5 (191)			7.5 (191)		
G	Load Backrest Height		in (mm)	48 (1219)			48 (1219)		
H	Overhead Guard Height[2]		in (mm)	88 (2235)			88 (2235)		
I	Chassis Height		in (mm)	50.2 (1275)			50.2 (1275)		
J	Chassis Width		in (mm)	41 (1041)			41 (1041)		
K	Wheelbase		in (mm)	45.3 (1151)	48.1 (1222)	50.1 (1273)	45.3 (1151)	48.1 (1222)	50.1 (1273)
L	Load Distance[1]		in (mm)	12.7 (323)			12.7 (323)		
M	Length to Fork Face[1]		in (mm)	66.3 (1684)	69.1 (1755)	71.1 (1806)	66.3 (1684)	69.1 (1755)	71.1 (1806)
N	Underclearance		in (mm)	3.3 (84)	4.12 (102)	3.87 (98)	3.3 (84)	4.12 (102)	3.87 (98)
O	Overall Width		in (mm)	41 (1041)			41 (1041)		
P	Fork Size		in (mm)	42 x 1.5 x 4 (1067 x 38 x 102)			42 x 1.5 x 4 (1067 x 38 x 102)		
Q	Fork Spread (outer edge to edge)	L x T x W	in (mm)	8 / 37 (203 / 940)			8 / 37 (203 / 940)		
R	Outside Turning Radius	Maximum / Maximum	in (mm)	52.7 (1339)	55.5 (1410)	57.5 (1461)	52.7 (1339)	55.5 (1410)	57.5 (1461)
	Basic Right Angle Stacking Aisle Width[1]		in (mm)	66.3 (1684)	69.1 (1755)	71.1 (1800)	66.3 (1684)	69.1 (1755)	71.1 (1800)
	Carriage Width		in (mm)	37 (940)			37 (940)		
	Step Height		in (mm)	8 (203)			8 (203)		
PERFORMANCE DATA				**SR1-BEF35 BATTERY COMPARTMENT SIZE**			**SR1-BET35 BATTERY COMPARTMENT SIZE**		
				13.5"	16.5"	18.5"	13.5"	16.5"	18.5"
Travel Speed	Maximum		mph (km/h)	7.2 (11.6)			7.2 (11.6)		
Gradeability		Full Load	%	15			15		
Grade Clearance			%	29	35	33	29	35	33
TRUCK WEIGHTS				**SR1-BEF35 BATTERY COMPARTMENT SIZE**			**SR1-BET35 BATTERY COMPARTMENT SIZE**		
				13.5"	16.5"	18.5"	13.5"	16.5"	18.5"
Total Weight	Without Battery		lb (kg)	6715 (3046)	6110 (2771)	6140 (2785)	7106 (3223)	6501 (2949)	6531 (2962)
TIRES				**SR1-BEF35 BATTERY COMPARTMENT SIZE**			**SR1-BET35 BATTERY COMPARTMENT SIZE**		
				13.5"	16.5"	18.5"	13.5"	16.5"	18.5"
Tires	Tire Type	Front / Rear		Solid Rubber / Solid Rubber	Solid Rubber / Solid Rubber	Solid Rubber / Polyurethane	Solid Rubber / Solid Rubber	Solid Rubber / Solid Rubber	Solid Rubber / Polyurethane
	Number (x = driven)	Front / Rear		2x / 2 (dual steer)			2x / 2 (dual steer)		
	Lifting	Front (Drive)	in (mm)	16.25 x 6 x 11.25 (413 x 152 x 286)			16.25 x 6 x 11.25 (413 x 152 x 286)		
		Rear (Steer)	in (mm)	10 x 5 x 6.5 (254 x 127 x 165) (Dual)			10 x 5 x 6.5 (254 x 127 x 165) (Dual)		
Brake Pedal				Plugging / Electric Disc Brake			Plugging / Electric Disc Brake		
POWER SYSTEM				**SR1-BEF35 BATTERY COMPARTMENT SIZE**			**SR1-BET35 BATTERY COMPARTMENT SIZE**		
				13.5"	16.5"	18.5"	13.5"	16.5"	18.5"
Battery Type				Lead Acid			Lead Acid		
Battery (6-hour ratings)	Compartment Size (W x L x H)	Maximum	in (mm)	38.5 x 13.75 x 32.3 (978 x 349 x 820)	38.5 x 16.5 x 32.3 (978 x 419 x 820)	38.5 x 18.5 x 32.3 (978 x 470 x 820)	38.5 x 13.75 x 32.3 (978 x 349 x 820)	38.5 x 16.5 x 32.3 (978 x 419 x 820)	38.5 x 18.5 x 32.3 (978 x 470 x 820)
	Voltage / Capacity	Maximum	V/AH	36 / 800	36 / 930	36 / 1085	36 / 800	36 / 930	36 / 1085
	Battery Size (W x L x H)	Maximum	in (mm)	38.5 x 13.5 x 32.3 (978 x 343 x 820)	38.5 x 16.3 x 32.3 (978 x 414 x 820)	38.5 x 18.3 x 32.3 (978 x 465 x 820)	38.5 x 13.5 x 32.3 (978 x 343 x 820)	38.5 x 16.3 x 32.3 (978 x 414 x 820)	38.5 x 18.3 x 32.3 (978 x 465 x 820)
	Weight	Minimum	lb (kg)	1700 (771)	1980 (898)	2300 (1043)	1700 (771)	1980 (898)	2300 (1043)
Motors	Drive			4 Pole Induction AC 3-Phase			4 Pole Induction AC 3-Phase		
			hp (kw)	7.0 (5.2)			7.0 (5.2)		
	Load Handling (Hydraulic)			DC			DC		
			hp (kw)	14.1 (10.5)			14.1 (10.5)		
	Hydrostatic Power Steering			Permanent Magnet DC			Permanent Magnet DC		
Control Type	Drive			Transistor - MOSFET			Transistor - MOSFET		
	Load Handling			Transistor - MOSFET			Transistor - MOSFET		
	Power Steering			Contactor			Contactor		
Operating Pressure		For Attachments	psi (kg / cm²)	2200			2200		
Auxiliary Flow Rate (3rd function)			gpm	2.5			2.5		
Auxiliary Flow Rate (4th function)			gpm	3 - 7			3 - 7		

1 Includes integral sideshift. Subtract 0.9 inches (23mm) for fixed carriage with no sideshift.
2 Overhead guard height tolerance is 0.5 inch.

TRUCK SPECIFICATIONS

MODEL NUMBERS

GENERAL DATA		SR1-BEF40		SR1-BET40	
Load Capacity	lb (kg)	4000 (1816)		4000 (1816)	
Load Center	in (mm)	24 (600)		24 (600)	
Battery Compartment Size	in.	18.5	21.25	18.5	21.25
Power Type		Battery		Battery	
Operator Position		Stand-Up		Stand-Up	

EXTERIOR DIMENSIONS			SR1-BEF40 BATTERY COMPARTMENT SIZE 18.5"	SR1-BEF40 BATTERY COMPARTMENT SIZE 21.25"	SR1-BET40 BATTERY COMPARTMENT SIZE 18.5"	SR1-BET40 BATTERY COMPARTMENT SIZE 21.25"
A	Maximum Fork Height (MFH)	in (mm)	140 (3556)		227 (5766)	
B	Free Lift	in (mm)	40 (1016)		48 (1219)	
C	Tilt Range (forward / backward)	degrees	3/5		3/5	
D	Mast Lowered Height	in (mm)	89 (2261)		99 (2515)	
E	Mast Extended Height	in (mm)	185 (4699)		275 (6985)	
F	Battery Roller Height	in (mm)	7.5 (191)		7.5 (191)	
G	Load Backrest Height	in (mm)	48 (1219)		48 (1219)	48 (1219)
H	Overhead Guard Height[2]	in (mm)	88 (2235)		88 (2235)	
I	Chassis Height	in (mm)	50.2 (1275)		50.2 (1275)	
J	Chassis Width	in (mm)	41 (1041)	42.5 (1080)	41 (1041)	42.5 (1080)
K	Wheelbase	in (mm)	50.1 (1273)	53.1 (1349)	50.1 (1273)	
L	Load Distance[1]	in (mm)	12.7 (323)		12.7 (323)	
M	Length to Fork Face[1]	in (mm)	71.1 (1806)	73.8 (1875)	71.1 (1806)	73.8 (1875)
N	Underclearance	in (mm)	3.87 (98)	3.75 (95)	3.87 (98)	3.75 (95)
O	Overall Width	in (mm)	41 (1041)		41 (1041)	
P	Fork Size	in (mm)	42 x 1.5 x 4 (1067 x 38 x 102)		42 x 1.5 x 4 (1067 x 38 x 102)	
Q	Fork Spread (outer edge to edge) L x T x W	in (mm)	8 / 37 (203 / 940)		8 / 37 (203 / 940)	
R	Outside Turning Radius Maximum / Maximum	in (mm)	57.5 (1461)	60.5 (1537)	57.5 (1461)	60.5 (1537)
	Basic Right Angle Stacking Aisle Width[1]	in (mm)	71.1 (1800)	73.8 (1875)	71.1 (1800)	73.8 (1875)
	Carriage Width	in (mm)	37 (940)		37 (940)	
	Step Height	in (mm)	8 (203)		8 (203)	

PERFORMANCE DATA			SR1-BEF40 BATTERY COMPARTMENT SIZE 18.5"	SR1-BEF40 BATTERY COMPARTMENT SIZE 21.25"	SR1-BET40 BATTERY COMPARTMENT SIZE 18.5"	SR1-BET40 BATTERY COMPARTMENT SIZE 21.25"
Travel Speed	Maximum	mph (km/h)	7.2 (11.6)		7.2 (11.6)	
Gradeability	Full Load	%	15		15	
Grade Clearance		%	33	31	33	31

TRUCK WEIGHTS			SR1-BEF40 BATTERY COMPARTMENT SIZE 18.5"	SR1-BEF40 BATTERY COMPARTMENT SIZE 21.25"	SR1-BET40 BATTERY COMPARTMENT SIZE 18.5"	SR1-BET40 BATTERY COMPARTMENT SIZE 21.25"
Total Weight	Without Battery	lb (kg)	6230 (2825)	6485 (2942)	6580 (2985)	6890 (3125)

TIRES				SR1-BEF40 BATTERY COMPARTMENT SIZE 18.5"	SR1-BEF40 BATTERY COMPARTMENT SIZE 21.25"	SR1-BET40 BATTERY COMPARTMENT SIZE 18.5"	SR1-BET40 BATTERY COMPARTMENT SIZE 21.25"
Tires	Tire Type	Front / Rear		Solid Rubber / Polyurethane		Solid Rubber / Polyurethane	
	Number (x = driven)	Front / Rear		2x / 2 (dual steer)		2x / 2 (dual steer)	
	Lifting	Front (Drive)	in (mm)	16.25 x 6 x 11.25 (413 x 152 x 286)	16.25 x 7 (413 x 178)	16.25 x 6 x 11.25 (413 x 152 x 286)	16.25 x 7 (413 x 178)
		Rear (Steer)	in (mm)	10 x 5 x 6.5 (254 x 127 x 165) (Dual)		10 x 5 x 6.5 (254 x 127 x 165) (Dual)	
Brake Pedal				Plugging / Electric Disc Brake		Plugging / Electric Disc Brake	

POWER SYSTEM				SR1-BEF40 BATTERY COMPARTMENT SIZE 18.5"	SR1-BEF40 BATTERY COMPARTMENT SIZE 21.25"	SR1-BET40 BATTERY COMPARTMENT SIZE 18.5"	SR1-BET40 BATTERY COMPARTMENT SIZE 21.25"
Battery Type				Lead Acid		Lead Acid	
Battery (6-hour ratings)	Compartment Size (W x L x H)	Maximum	in (mm)	38.5 x 18.5 x 32.3 (978 x 470 x 820)	38.5 x 21.25 x 32.3 (978 x 540 x 820)	38.5 x 18.5 x 32.3 (978 x 470 x 820)	38.5 x 21.25 x 32.3 (978 x 540 x 820)
	Voltage / Capacity	Maximum	V/AH	36 / 1085	36 / 1240	36 / 1085	36 / 1240
	Battery Size (W x L x H)	Maximum	in (mm)	38.5 x 18.3 x 32.3 (978 x 465 x 820)	38.5 x 21.0 x 32.3 (978 x 533 x 820)	38.5 x 18.3 x 32.3 (978 x 465 x 820)	38.5 x 21.0 x 32.3 (978 x 533 x 820)
	Weight	Minimum	lb (kg)	2300 (1043)	2593 (1176)	2300 (1043)	2593 (1176)
Motors	Drive			4 Pole Induction AC 3-Phase		4 Pole Induction AC 3-Phase	
			hp (kw)	7.0 (5.2)		7.0 (5.2)	
	Load Handling (Hydraulic)			DC		DC	
			hp (kw)	14.1 (10.5)		14.1 (10.5)	
	Hydrostatic Power Steering			Permanent Magnet DC		Permanent Magnet DC	
Control Type	Drive			Transistor - MOSFET		Transistor - MOSFET	
	Load Handling			Transistor - MOSFET		Transistor - MOSFET	
	Power Steering			Contactor		Contactor	
Operating Pressure		For Attachments	psi (kg / cm²)	2200		2200	
Auxiliary Flow Rate (3rd function)			gpm	2.5		2.5	
Auxiliary Flow Rate (4th function)			gpm	3 - 7		3 - 7	

1 Includes integral sideshift. Subtract 0.9 inches (23mm) for fixed carriage with no sideshift.
2 Overhead guard height tolerance is 0.5 inch.

MODEL NUMBERS

GENERAL DATA			SR1-HPF30			SR1-HPT30			SR1-HPM30	
Load Capacity		lb (kg)	3000 (1361)			3000 (1361)			3000 (1361)	
Load Center		in (mm)	24 (600)			24 (600)			24 (600)	
Battery Compartment Size		in.	13.5	16.5	18.5	13.5	16.5	18.5	18.5	18.5 (Narrow Tread)
Power Type			Battery			Battery			Battery	
Operator Position			Stand-Up			Stand-Up			Stand-Up	

EXTERIOR DIMENSIONS				SR1-HPF30 BATTERY COMPARTMENT SIZE 13.5"	SR1-HPF30 BATTERY COMPARTMENT SIZE 16.5"	SR1-HPF30 BATTERY COMPARTMENT SIZE 18.5"	SR1-HPT30 BATTERY COMPARTMENT SIZE 13.5"	SR1-HPT30 BATTERY COMPARTMENT SIZE 16.5"	SR1-HPT30 BATTERY COMPARTMENT SIZE 18.5"	SR1-HPM30 BATTERY COMPARTMENT SIZE 18.5"	SR1-HPM30 BATTERY COMPARTMENT SIZE 18.5" (NT)
A	Maximum Fork Height (MFH)		in (mm)	140 (3556)			227 (5766)	227 (5766)	251 (6375)	258.5 (6566)	240.5 (6109)
B	Free Lift		in (mm)	41 (1041)			51 (1295)	51 (1295)	59 (1499)	41 (1041)	35 (889)
C	Tilt Range (forward / backward)		degrees	3/5			3/5			3/5	
D	Mast Lowered Height		in (mm)	89 (2261)			99 (2515)	99 (2515)	107 (2718)	107 (2718)	83 (2108)
E	Mast Extended Height		in (mm)	188 (4775)			275 (6985)	275 (6985)	299 (7594)	299 (7594)	289 (7341)
F	Battery Roller Height		in (mm)	7.5 (191)			7.5 (191)			7.5 (191)	
G	Load Backrest Height		in (mm)	48 (1219)			48 (1219)			48 (1219)	
H	Overhead Guard Height[2]		in (mm)	88 (2235)			88 (2235)			88 (2235)	
I	Chassis Height		in (mm)	50.2 (1275)			50.2 (1275)			50.2 (1275)	
J	Chassis Width		in (mm)	41 (1041)			41 (1041)			44 (1118)	41 (1041)
K	Wheelbase		in (mm)	45.6 (1158)	48.4 (1230)	50.4 (1280)	45.6 (1158)	48.4 (1230)	50.4 (1280)	50.4 (1280)	
L	Load Distance[1]		in (mm)	12.7 (323)			12.7 (323)			12.7 (323)	
M	Length to Fork Face[1]		in (mm)	66.5 (1688)	69.2 (1758)	71.2 (1808)	66.5 (1688)	69.2 (1758)	71.2 (1808)	71.8 (1823)	73.3 (1862)
N	Underclearance		in (mm)	4.12 (105)			4.12 (105)	4.12 (105)	3.87 (98)	3.87 (98)	
O	Overall Width		in (mm)	41 (1041)			41 (1041)			44 (1118)	41 (1041)
P	Fork Size		in (mm)	42 x 1.5 x 4 (1067 x 38 x 102)			42 x 1.5 x 4 (1067 x 38 x 102)			42 x 1.5 x 4 (1067 x 38 x 102)	
Q	Fork Spread (outer edge to edge)	L x T x W	in (mm)	13 / 35 (330 / 889)			13 / 35 (330 / 889)			8 / 37 (203 / 940)	
R	Outside Turning Radius	Maximum / Maximum	in (mm)	53.1 (1349)	55.8 (1417)	57.8 (1468)	53.1 (1349)	55.8 (1417)	57.8 (1468)	57.8 (1468)	
	Basic Right Angle Stacking Aisle Width[1]		in (mm)	66.3 (1684)	69.1 (1755)	71.1 (1866)	66.3 (1684)	69.1 (1755)	71.1 (1866)	71.8 (1823)	
	Carriage Width		in (mm)	36 (914)			36 (914)			36 (914)	
	Step Height		in (mm)	9.4 (239)			9.4 (239)			9.4 (239)	

PERFORMANCE DATA				SR1-HPF30 BATTERY COMPARTMENT SIZE 13.5"	SR1-HPF30 BATTERY COMPARTMENT SIZE 16.5"	SR1-HPF30 BATTERY COMPARTMENT SIZE 18.5"	SR1-HPT30 BATTERY COMPARTMENT SIZE 13.5"	SR1-HPT30 BATTERY COMPARTMENT SIZE 16.5"	SR1-HPT30 BATTERY COMPARTMENT SIZE 18.5"	SR1-HPM30 BATTERY COMPARTMENT SIZE 18.5"	SR1-HPM30 BATTERY COMPARTMENT SIZE 18.5" (NT)
Travel Speed	Maximum		mph (km/h)	8.0 (12.87)			8.0 (12.87)			8.0 (12.87)	
Gradeability		Full Load	%	15			15			15	
Grade Clearance			%	36	35	33	36	35	33	33	

TRUCK WEIGHTS			SR1-HPF30 BATTERY COMPARTMENT SIZE 13.5"	SR1-HPF30 BATTERY COMPARTMENT SIZE 16.5"	SR1-HPF30 BATTERY COMPARTMENT SIZE 18.5"	SR1-HPT30 BATTERY COMPARTMENT SIZE 13.5"	SR1-HPT30 BATTERY COMPARTMENT SIZE 16.5"	SR1-HPT30 BATTERY COMPARTMENT SIZE 18.5"	SR1-HPM30 BATTERY COMPARTMENT SIZE 18.5"	SR1-HPM30 BATTERY COMPARTMENT SIZE 18.5" (NT)
Total Weight	Without Battery	lb (kg)	6537 (2965)	6317 (2865)	6597 (2992)	7037 (3192)	6817 (3092)	7153 (3245)	7445 (3377)	7355 (3336)

TIRES				SR1-HPF30 BATTERY COMPARTMENT SIZE 13.5"	SR1-HPF30 BATTERY COMPARTMENT SIZE 16.5"	SR1-HPF30 BATTERY COMPARTMENT SIZE 18.5"	SR1-HPT30 BATTERY COMPARTMENT SIZE 13.5"	SR1-HPT30 BATTERY COMPARTMENT SIZE 16.5"	SR1-HPT30 BATTERY COMPARTMENT SIZE 18.5"	SR1-HPM30 BATTERY COMPARTMENT SIZE 18.5"	SR1-HPM30 BATTERY COMPARTMENT SIZE 18.5" (NT)
Tires	Tire Type	Front / Rear		Solid Rubber / Polyurethane			Solid Rubber / Polyurethane			Solid Rubber / Polyurethane	
	Number (x = driven)	Front / Rear		2x / 2 (dual steer)			2x / 2 (dual steer)			2x / 2 (dual steer)	
	Lifting	Front (Drive)	in (mm)	16.25 x 6 (413 x 152)			16.25 x 6 (413 x 152)			16.25 x 6 (413 x 152)	
		Rear (Steer)	in (mm)	10 x 5 x 6.5 (254 x 127 x 165) (Dual)			10 x 5 x 6.5 (254 x 127 x 165) (Dual)			10 x 5 x 6.5 (254 x 127 x 165) (Dual)	
Brake Pedal				Plugging / Electric Disc Brake			Plugging / Electric Disc Brake			Plugging / Electric Disc Brake	

POWER SYSTEM				SR1-HPF30 BATTERY COMPARTMENT SIZE 13.5"	SR1-HPF30 BATTERY COMPARTMENT SIZE 16.5"	SR1-HPF30 BATTERY COMPARTMENT SIZE 18.5"	SR1-HPT30 BATTERY COMPARTMENT SIZE 13.5"	SR1-HPT30 BATTERY COMPARTMENT SIZE 16.5"	SR1-HPT30 BATTERY COMPARTMENT SIZE 18.5"	SR1-HPM30 BATTERY COMPARTMENT SIZE 18.5"	SR1-HPM30 BATTERY COMPARTMENT SIZE 18.5" (NT)
Battery Type				Lead Acid			Lead Acid			Lead Acid	
Battery (6-hour ratings)	Compartment Size (W x L x H)	Maximum	in (mm)	38.5 x 13.75 x 32.3 (978 x 349 x 820)			38.5 x 13.75 x 32.3 (978 x 349 x 820)			38.5 x 18.5 x 32.3 (978 x 470 x 820)	
	Voltage / Capacity	Maximum	V/AH	36 / 800	36 / 930	36 / 1085	36 / 800	36 / 930	36 / 1085	36 / 1085	
	Battery Size (W x L x H)	Maximum	in (mm)	38.5 x 13.5 x 32.3 (978 x 343 x 820)			38.5 x 16.5 x 32.3 (978 x 343 x 820)			38.5 x 18.3 x 32.3 (978 x 465 x 820)	
	Weight	Minimum	lb (kg)	1700 (771)	1980 (898)	2300 (1043)	1700 (771)	1980 (898)	2300 (1043)	2300 (1043)	
Motors	Drive			4 Pole Induction AC 3-Phase			4 Pole Induction AC 3-Phase			4 Pole Induction AC 3-Phase	
			hp (kw)	7.0 (5.2)			7.0 (5.2)			7.0 (5.2)	
	Load Handling (Hydraulic)			4 Pole Induction AC 3-Phase			4 Pole Induction AC 3-Phase			4 Pole Induction AC 3-Phase	
			hp (kw)	14.1 (10.5)			14.1 (10.5)			14.1 (10.5)	
	Hydrostatic Power Steering			Permanent Magnet DC			Permanent Magnet DC			Permanent Magnet DC	
Control Type	Drive			Transistor - MOSFET			Transistor - MOSFET			Transistor - MOSFET	
	Load Handling			Transistor - MOSFET			Transistor - MOSFET			Transistor - MOSFET	
	Power Steering			Contactor			Contactor			Contactor	
Operating Pressure		For Attachments	psi (kg / cm²)	2200			2200			2200	
Auxiliary Flow Rate (3rd function)			gpm	2.5			2.5			2.5	
Auxiliary Flow Rate (4th function)			gpm	3 - 10			3 - 10			3 - 10	

1 Includes integral sideshift. Subtract 0.9 inches (23mm) for fixed carriage with no sideshift.
2 Overhead guard height tolerance is 0.5 inch.

TRUCK SPECIFICATIONS

MODEL NUMBERS

GENERAL DATA			SR1-HPF35			SR1-HPT35		
Load Capacity		lb (kg)	3500 (1588)			3500 (1588)		
Load Center		in (mm)	24 (600)			24 (600)		
Battery Compartment Size		in.	13.5	16.5	18.5	13.5	16.5	18.5
Power Type			Battery			Battery		
Operator Position			Stand-Up			Stand-Up		

EXTERIOR DIMENSIONS				SR1-HPF35 BATTERY COMPARTMENT SIZE			SR1-HPT35 BATTERY COMPARTMENT SIZE		
				13.5"	16.5"	18.5"	13.5"	16.5"	18.5"
A	Maximum Fork Height (MFH)		in (mm)	140 (3556)			227 (5766)	227 (5766)	251 (6375)
B	Free Lift		in (mm)	41 (1041)			51 (1295)	51 (1295)	59 (1499)
C	Tilt Range (forward / backward)		degrees	3/5			3/5		
D	Mast Lowered Height		in (mm)	89 (2261)			99 (2515)	99 (2515)	107 (2718)
E	Mast Extended Height		in (mm)	188 (4775)			275 (6985)	275 (6985)	299 (7594)
F	Battery Roller Height		in (mm)	7.5 (191)			7.5 (191)		
G	Load Backrest Height		in (mm)	48 (1219)			48 (1219)		
H	Overhead Guard Height[2]		in (mm)	88 (2235)			88 (2235)		
I	Chassis Height		in (mm)	50.2 (1275)			50.2 (1275)		
J	Chassis Width		in (mm)	41 (1041)			41 (1041)		
K	Wheelbase		in (mm)	45.6 (1158)	48.4 (1230)	50.4 (1280)	45.6 (1158)	48.4 (1230)	50.4 (1280)
L	Load Distance[1]		in (mm)	12.7 (323)			12.7 (323)		
M	Length to Fork Face[1]		in (mm)	66.5 (1688)	69.2 (1758)	71.2 (1808)	66.5 (1688)	69.2 (1758)	71.2 (1808)
N	Underclearance		in (mm)	3.3 (84)	4.12 (105)	3.87 (98)	3.3 (84)	4.12 (105)	3.87 (98)
O	Overall Width		in (mm)	41 (1041)			41 (1041)		
P	Fork Size		in (mm)	42 x 1.5 x 4 (1067 x 38 x 102)			42 x 1.5 x 4 (1067 x 38 x 102)		
Q	Fork Spread (outer edge to edge)	L x T x W	in (mm)	13 / 35 (330 / 889)			13 / 35 (330 / 889)		
R	Outside Turning Radius	Maximum / Maximum	in (mm)	53.1 (1349)	55.8 (1417)	57.8 (1468)	53.1 (1349)	55.8 (1417)	57.8 (1468)
	Basic Right Angle Stacking Aisle Width[1]		in (mm)	66.3 (1684)	69.1 (1755)	71.1 (1866)	66.3 (1684)	69.1 (1755)	71.1 (1866)
	Carriage Width		in (mm)	36 (914)			36 (914)		
	Step Height		in (mm)	9.4 (239)			9.4 (239)		

PERFORMANCE DATA				SR1-HPF35 BATTERY COMPARTMENT SIZE			SR1-HPT35 BATTERY COMPARTMENT SIZE		
				13.5"	16.5"	18.5"	13.5"	16.5"	18.5"
Travel Speed	Maximum		mph (km/h)	8.0 (12.87)			8.0 (12.87)		
Gradeability		Full Load	%	15			15		
Grade Clearance			%	29	35	33	29	35	33

TRUCK WEIGHTS			SR1-HPF35 BATTERY COMPARTMENT SIZE			SR1-HPT35 BATTERY COMPARTMENT SIZE		
			13.5"	16.5"	18.5"	13.5"	16.5"	18.5"
Total Weight	Without Battery	lb (kg)	6922 (3140)	6317 (2865)	6597 (2992)	7422 (3367)	6817 (3092)	7153 (3245)

TIRES				SR1-HPF35 BATTERY COMPARTMENT SIZE			SR1-HPT35 BATTERY COMPARTMENT SIZE		
				13.5"	16.5"	18.5"	13.5"	16.5"	18.5"
Tires	Tire Type	Front / Rear		Solid Rubber / Polyurethane			Solid Rubber / Polyurethane		
	Number (x = driven)	Front / Rear		2x / 2 (dual steer)			2x / 2 (dual steer)		
	Lifting	Front (Drive)	in (mm)	16.25 x 6 (413 x 152)			16.25 x 6 (413 x 152)		
		Rear (Steer)	in (mm)	10 x 5 x 6.5 (254 x 127 x 165) (Dual)			10 x 5 x 6.5 (254 x 127 x 165) (Dual)		
Brake Pedal				Plugging / Electric Disc Brake			Plugging / Electric Disc Brake		

POWER SYSTEM				SR1-HPF35 BATTERY COMPARTMENT SIZE			SR1-HPT35 BATTERY COMPARTMENT SIZE		
				13.5"	16.5"	18.5"	13.5"	16.5"	18.5"
Battery Type				Lead Acid			Lead Acid		
Battery (6-hour ratings)	Compartment Size (W x L x H)	Maximum	in (mm)	38.5 x 13.75 x 32.3			38.5 x 13.75 x 32.3	38.5 x 16.5 x 32.3	38.5 x 18.5 x 32.3
				(978 x 349 x 820)			(978 x 349 x 820)	(978 x 419 x 820)	(978 x 470 x 820)
	Voltage / Capacity	Maximum	V/AH	36 / 800	36 / 930	36 / 1085	36 / 800	36 / 930	36 / 1085
	Battery Size (W x L x H)	Maximum	in (mm)	38.5 x 13.5 x 32.3	38.5 x 16.3 x 32.3	38.5 x 18.3 x 32.3	38.5 x 13.5 x 32.3	38.5 x 16.3 x 32.3	38.5 x 18.3 x 32.3
				(978 x 343 x 820)	(978 x 414 x 820)	(978 x 465 x 820)	(978 x 343 x 820)	(978 x 414 x 820)	(978 x 465 x 820)
	Weight	Minimum	lb (kg)	1700 (771)	1980 (898)	2300 (1043)	1700 (771)	1980 (898)	2300 (1043)
Motors	Drive			4 Pole Induction AC 3-Phase			4 Pole Induction AC 3-Phase		
			hp (kw)	7.0 (5.2)			7.0 (5.2)		
	Load Handling (Hydraulic)			4 Pole Induction AC 3-Phase			4 Pole Induction AC 3-Phase		
			hp (kw)	14.1 (10.5)			14.1 (10.5)		
	Hydrostatic Power Steering			Permanent Magnet DC			Permanent Magnet DC		
Control Type	Drive			Transistor - MOSFET			Transistor - MOSFET		
	Load Handling			Transistor - MOSFET			Transistor - MOSFET		
	Power Steering			Contactor			Contactor		
Operating Pressure		For Attachments	psi (kg / cm²)	2200			2200		
Auxiliary Flow Rate (3rd function)			gpm	2.5			2.5		
Auxiliary Flow Rate (4th function)			gpm	3 - 10			3 - 10		

1 Includes integral sideshift. Subtract 0.9 inches (23mm) for fixed carriage with no sideshift.
2 Overhead guard height tolerance is 0.5 inch.

MODEL NUMBERS

GENERAL DATA			SR1-HPM35		SR1-HPF40		SR1-HPT40	
Load Capacity		lb (kg)	3500 (1588)		4000 (1816)		4000 (1816)	
Load Center		in (mm)	24 (600)		24 (600)		24 (600)	
Battery Compartment Size		in.	18.5	18.5 (Narrow Tread)	18.5	21.25	18.5	21.25
Power Type			Battery		Battery		Battery	
Operator Position			Stand-Up		Stand-Up		Stand-Up	

EXTERIOR DIMENSIONS			SR1-HPM35 BATTERY COMPARTMENT SIZE 18.5"	SR1-HPM35 BATTERY COMPARTMENT SIZE 18.5" (NT)	SR1-HPF40 BATTERY COMPARTMENT SIZE 18.5"	SR1-HPF40 BATTERY COMPARTMENT SIZE 21.25"	SR1-HPT40 BATTERY COMPARTMENT SIZE 18.5"	SR1-HPT40 BATTERY COMPARTMENT SIZE 21.25"
A	Maximum Fork Height (MFH)	in (mm)	258.5 (6566)	240.5 (6109)	140 (3556)		251 (6375)	
B	Free Lift	in (mm)	41 (1041)	35 (889)	41 (1041)		59 (1499)	
C	Tilt Range (forward / backward)	degrees	3/5		3/5		3/5	
D	Mast Lowered Height	in (mm)	89 (2261)	83 (2108)	89 (2261)		107 (2718)	
E	Mast Extended Height	in (mm)	307 (7798)	289 (7341)	188 (4775)		299 (7594)	
F	Battery Roller Height	in (mm)	7.5 (191)		7.5 (191)		7.5 (191)	
G	Load Backrest Height	in (mm)	48 (1219)		48 (1219)		48 (1219)	
H	Overhead Guard Height[2]	in (mm)	88 (2235)		88 (2235)		88 (2235)	
I	Chassis Height	in (mm)	50.2 (1275)		50.2 (1275)		50.2 (1275)	
J	Chassis Width	in (mm)	44 (1118)	41 (1041)	41 (1041)	42.5 (1080)	41 (1041)	42.5 (1080)
K	Wheelbase	in (mm)	50.4 (1280)		50.4 (1280)	53.1 (1349)	50.4 (1280)	53.1 (1349)
L	Load Distance[1]	in (mm)	12.7 (323)		12.7 (323)		12.7 (323)	
M	Length to Fork Face[1]	in (mm)	71.8 (1823)	73.3 (1862)	71.2 (1808)	74.0 (1878)	71.2 (1808)	74.0 (1878)
N	Underclearance	in (mm)	3.87 (98)		3.87 (98)	3.75 (95)	3.87 (98)	3.75 (95)
O	Overall Width	in (mm)	44 (1118)	41 (1041)	41 (1041)	42.5 (1080)	41 (1041)	42.5 (1080)
P	Fork Size	in (mm)	42 x 1.5 x 4 (1067 x 38 x 102)		42 x 1.5 x 4 (1067 x 38 x 102)		42 x 1.5 x 4 (1067 x 38 x 102)	
Q	Fork Spread (outer edge to edge) L x T x W	in (mm)	8 / 37 (203 / 940)		13 / 35 (330 / 889)		13 / 35 (330 / 889)	
R	Outside Turning Radius Maximum / Maximum	in (mm)	57.8 (1468)		57.8 (1468)	60.5 (1537)	57.8 (1468)	60.5 (1537)
	Basic Right Angle Stacking Aisle Width[1]	in (mm)	71.8 (1823)		71.1 (1866)	73.8 (1875)	71.1 (1866)	73.8 (1875)
	Carriage Width	in (mm)	36 (914)		36 (914)		36 (914)	
	Step Height	in (mm)	9.4 (239)		9.4 (239)		9.4 (239)	

PERFORMANCE DATA			SR1-HPM35 BATTERY COMPARTMENT SIZE 18.5"	SR1-HPM35 BATTERY COMPARTMENT SIZE 18.5" (NT)	SR1-HPF40 BATTERY COMPARTMENT SIZE 18.5"	SR1-HPF40 BATTERY COMPARTMENT SIZE 21.25"	SR1-HPT40 BATTERY COMPARTMENT SIZE 18.5"	SR1-HPT40 BATTERY COMPARTMENT SIZE 21.25"
Travel Speed	Maximum	mph (km/h)	8.0 (12.87)		8.0 (12.87)		8.0 (12.87)	
Gradeability	Full Load	%	15		15		15	
Grade Clearance		%	33		33	31	33	31

TRUCK WEIGHTS			SR1-HPM35 BATTERY COMPARTMENT SIZE 18.5"	SR1-HPM35 BATTERY COMPARTMENT SIZE 18.5" (NT)	SR1-HPF40 BATTERY COMPARTMENT SIZE 18.5"	SR1-HPF40 BATTERY COMPARTMENT SIZE 21.25"	SR1-HPT40 BATTERY COMPARTMENT SIZE 18.5"	SR1-HPT40 BATTERY COMPARTMENT SIZE 21.25"
Total Weight	Without Battery	lb (kg)	7445 (3377)	7355 (3336)	6700 (3039)	6697 (3038)	7230 (3279)	7253 (3290)

TIRES				SR1-HPM35 BATTERY COMPARTMENT SIZE 18.5"	SR1-HPM35 BATTERY COMPARTMENT SIZE 18.5" (NT)	SR1-HPF40 BATTERY COMPARTMENT SIZE 18.5"	SR1-HPF40 BATTERY COMPARTMENT SIZE 21.25"	SR1-HPT40 BATTERY COMPARTMENT SIZE 18.5"	SR1-HPT40 BATTERY COMPARTMENT SIZE 21.25"
Tires	Tire Type	Front / Rear		Solid Rubber / Polyurethane		Solid Rubber / Polyurethane		Solid Rubber / Polyurethane	
	Number (x = driven)	Front / Rear		2x / 2 (dual steer)		2x / 2 (dual steer)		2x / 2 (dual steer)	
	Lifting	Front (Drive)	in (mm)	16.25 x 6 (413 x 152)		16.25 x 6 (413 x 152)	16.25 x 7 (413 x 178)	16.25 x 6 (413 x 152)	16.25 x 7 (413 x 178)
		Rear (Steer)	in (mm)	10 x 5 x 6.5 (254 x 127 x 165) (Dual)		10 x 5 x 6.5 (254 x 127 x 165) (Dual)		10 x 5 x 6.5 (254 x 127 x 165) (Dual)	
Brake Pedal				Plugging / Electric Disc Brake		Plugging / Electric Disc Brake		Plugging / Electric Disc Brake	

POWER SYSTEM				SR1-HPM35 BATTERY COMPARTMENT SIZE 18.5"	SR1-HPM35 BATTERY COMPARTMENT SIZE 18.5" (NT)	SR1-HPF40 BATTERY COMPARTMENT SIZE 18.5"	SR1-HPF40 BATTERY COMPARTMENT SIZE 21.25"	SR1-HPT40 BATTERY COMPARTMENT SIZE 18.5"	SR1-HPT40 BATTERY COMPARTMENT SIZE 21.25"
Battery Type				Lead Acid		Lead Acid		Lead Acid	
Battery (6-hour ratings)	Compartment Size (W x L x H)	Maximum	in (mm)	38.5 x 18.5 x 32.3		38.5 x 18.5 x 32.3	38.5 x 21.25 x 32.3	38.5 x 18.5 x 32.3	38.5 x 21.25 x 32.3
				(978 x 470 x 820)		(978 x 470 x 820)	(978 x 540 x 820)	(978 x 470 x 820)	(978 x 540 x 820)
	Voltage / Capacity	Maximum	V/AH	36 / 1085		36 / 1085	36 / 1240	36 / 1085	36 / 1240
	Battery Size (W x L x H)	Maximum	in (mm)	38.5 x 18.3 x 32.3		38.5 x 18.3 x 32.3	38.5 x 21.0 x 32.3	38.5 x 18.3 x 32.3	38.5 x 21.0 x 32.3
				(978 x 465 x 820)		(978 x 465 x 820)	(978 x 533 x 820)	(978 x 465 x 820)	(978 x 533 x 820)
	Weight	Minimum	lb (kg)	2300 (1043)		2300 (1043)	2593 (1176)	2300 (1043)	2593 (1176)
Motors	Drive			4 Pole Induction AC 3-Phase		4 Pole Induction AC 3-Phase		4 Pole Induction AC 3-Phase	
			hp (kw)	7.0 (5.2)		7.0 (5.2)		7.0 (5.2)	
	Load Handling (Hydraulic)			4 Pole Induction AC 3-Phase		4 Pole Induction AC 3-Phase		4 Pole Induction AC 3-Phase	
			hp (kw)	14.1 (10.5)		14.1 (10.5)		14.1 (10.5)	
	Hydrostatic Power Steering			Permanent Magnet DC		Permanent Magnet DC		Permanent Magnet DC	
Control Type	Drive			Transistor - MOSFET		Transistor - MOSFET		Transistor - MOSFET	
	Load Handling			Transistor - MOSFET		Transistor - MOSFET		Transistor - MOSFET	
	Power Steering			Contactor		Contactor		Contactor	
Operating Pressure		For Attachments	psi (kg / cm²)	2200		2200		2200	
Auxiliary Flow Rate (3rd function)			gpm	2.5		2.5		2.5	
Auxiliary Flow Rate (4th function)			gpm	3 - 10		3 - 10		3 - 10	

1 Includes integral sideshift. Subtract 0.9 inches (23mm) for fixed carriage with no sideshift.
2 Overhead guard height tolerance is 0.5 inch.

TRUCK SPECIFICATIONS

MODEL NUMBERS

GENERAL DATA			SR1-HPM40			
Load Capacity		lb (kg)	4000 (1816)			
Load Center		in (mm)	24 (600)			
Battery Compartment Size		in.	18.5	18.5 (Narrow Tread)	21.25	21.25 (Narrow Tread)
Power Type			Battery			
Operator Position			Stand-Up			

EXTERIOR DIMENSIONS			SR1-HPM40 BATTERY COMPARTMENT SIZE 18.5"	18.5" (NT)	21.25"	21.25" (NT)
A	Maximum Fork Height (MFH)	in (mm)	258.5 (6566)	240.5 (6109)	258.5 (6566)	258.5 (6566)
B	Free Lift	in (mm)	41 (1041)	35 (889)	41 (1041)	41 (1041)
C	Tilt Range (forward / backward)	degrees	3/5			
D	Mast Lowered Height	in (mm)	89 (2261)	83 (2108)	89 (2261)	89 (2261)
E	Mast Extended Height	in (mm)	307 (7798)	289 (7341)	307 (7798)	307 (7798)
F	Battery Roller Height	in (mm)	7.5 (191)			
G	Load Backrest Height	in (mm)	48 (1219)			
H	Overhead Guard Height[2]	in (mm)	88 (2235)			
I	Chassis Height	in (mm)	50.2 (1275)			
J	Chassis Width	in (mm)	44 (1118)	41 (1041)	46 (1168)	42.5 (1080)
K	Wheelbase	in (mm)	50.4 (1280)	50.4 (1280)	53.1 (1349)	53.1 (1349)
L	Load Distance[1]	in (mm)	12.7 (323)			
M	Length to Fork Face[1]	in (mm)	71.8 (1823)	73.3 (1862)	74.5 (1893)	76.1 (1932)
N	Underclearance	in (mm)	3.87 (98)	3.87 (98)	3.75 (95)	3.75 (95)
O	Overall Width	in (mm)	44 (1118)	41 (1041)	46 (1168)	42.5 (1080)
P	Fork Size	in (mm)	42 x 1.5 x 4 (1067 x 38 x 102)			
Q	Fork Spread (outer edge to edge) L x T x W	in (mm)	8 / 37 (203 / 940)			
R	Outside Turning Radius Maximum / Maximum	in (mm)	57.8 (1468)	57.8 (1468)	60.5 (1537)	60.5 (1537)
	Basic Right Angle Stacking Aisle Width[1]	in (mm)	71.8 (1823)	71.8 (1823)	74.5 (1893)	74.5 (1893)
	Carriage Width	in (mm)	36 (914)			
	Step Height	in (mm)	9.4 (239)			

PERFORMANCE DATA			SR1-HPM40 BATTERY COMPARTMENT SIZE 18.5"	18.5" (NT)	21.25"	21.25" (NT)
Travel Speed	Maximum	mph (km/h)	8.0 (12.87)			
Gradeability	Full Load	%	15			
Grade Clearance		%	33	33	31	31

TRUCK WEIGHTS			SR1-HPM40 BATTERY COMPARTMENT SIZE 18.5"	18.5" (NT)	21.25"	21.25" (NT)
Total Weight	Without Battery	lb (kg)	7580 (3438)	7440 (3375)	7545 (3422)	7545 (3422)

TIRES				SR1-HPM40 BATTERY COMPARTMENT SIZE 18.5"	18.5" (NT)	21.25"	21.25" (NT)
Tires	Tire Type	Front / Rear		Solid Rubber / Polyurethane			
	Number (x = driven)	Front / Rear		2x / 2 (dual steer)			
	Lifting	Front (Drive)	in (mm)	16.25 x 6 (413 x 152)	16.25 x 6 (413 x 152)	16.25 x 7 (413 x 178)	16.25 x 7 (413 x 178)
		Rear (Steer)	in (mm)	10 x 5 x 6.5 (254 x 127 x 165) (Dual)			
Brake Pedal			Plugging / Electric Disc Brake				

POWER SYSTEM				SR1-HPM40 BATTERY COMPARTMENT SIZE 18.5"	18.5" (NT)	21.25"	21.25" (NT)
Battery Type				Lead Acid			
Battery (6-hour ratings)	Compartment Size (W x L x H)	Maximum	in (mm)	38.5 x 18.5 x 32.3	38.5 x 18.5 x 32.3	38.5 x 21.25 x 32.3	38.5 x 21.25 x 32.3
				(978 x 470 x 820)	(978 x 470 x 820)	(978 x 540 x 820)	(978 x 540 x 820)
	Voltage / Capacity	Maximum	V/AH	36 / 1085	36 / 1085	36 / 1240	36 / 1240
	Battery Size (W x L x H)	Maximum	in (mm)	38.5 x 18.3 x 32.3	38.5 x 18.3 x 32.3	38.5 x 21.0 x 32.3	38.5 x 21.0 x 32.3
				(978 x 465 x 820)	(978 x 465 x 820)	(978 x 533 x 820)	(978 x 533 x 820)
	Weight	Minimum	lb (kg)	2300 (1043)	2300 (1043)	2593 (1176)	2593 (1176)
Motors	Drive			4 Pole Induction AC 3-Phase			
			hp (kw)	7.0 (5.2)			
	Load Handling (Hydraulic)			4 Pole Induction AC 3-Phase			
			hp (kw)	14.1 (10.5)			
	Hydrostatic Power Steering			Permanent Magnet DC			
Control Type	Drive			Transistor - MOSFET			
	Load Handling			Transistor - MOSFET			
	Power Steering			Contactor			
Operating Pressure		For Attachments	psi (kg / cm²)	2200			
Auxiliary Flow Rate (3rd function)			gpm	2.5			
Auxiliary Flow Rate (4th function)			gpm	3 - 10			

1 Includes integral sideshift. Subtract 0.9 inches (23mm) for fixed carriage with no sideshift.
2 Overhead guard height tolerance is 0.5 inch.

MODEL NUMBERS

GENERAL DATA			SR1-HPF50	SR1-HPT50	SR1-HPM50	
Load Capacity		lb (kg)	5000 (2268)	5000 (2268)	4000 (1816)[3]	
Load Center		in (mm)	24 (600)	24 (600)	24 (600)	
Battery Compartment Size		in.	23.75	23.75	23.75	23.75 (Narrow Tread)
Power Type			Battery	Battery	Battery	
Operator Position			Stand-Up	Stand-Up	Stand-Up	

EXTERIOR DIMENSIONS				SR1-HPF50 BATTERY COMPARTMENT SIZE 23.75"	SR1-HPT50 BATTERY COMPARTMENT SIZE 23.75"	SR1-HPM50 BATTERY COMPARTMENT SIZE 23.75"	23.75" (NT)
A	Maximum Fork Height (MFH)		in (mm)	136 (3454)	251 (6375)	270.5 (6871)	
B	Free Lift		in (mm)	41 (1041)	59 (1499)	45 (1143)	
C	Tilt Range (forward / backward)		degrees	3/5	3/5	3/5	
D	Mast Lowered Height		in (mm)	89 (2261)	107 (2718)	93.5 (2375)	
E	Mast Extended Height		in (mm)	184 (4674)	299 (7594)	319 (8102)	
F	Battery Roller Height		in (mm)	7.5 (191)	7.5 (191)	7.5 (191)	
G	Load Backrest Height		in (mm)	48 (1219)	48 (1219)	48 (1219)	
H	Overhead Guard Height[2]		in (mm)	88 (2235)	88 (2235)	88 (2235)	
I	Chassis Height		in (mm)	50.2 (1275)	50.2 (1275)	50.2 (1275)	
J	Chassis Width		in (mm)	42.5 (1080)	42.5 (1080)	46 (1168)	42.5 (1080)
K	Wheelbase		in (mm)	53.1 (1349)	53.1 (1349)	53.1 (1349)	
L	Load Distance[1]		in (mm)	12.7 (323)	12.7 (323)	12.7 (323)	
M	Length to Fork Face[1]		in (mm)	76.7 (1948)	76.7 (1948)	77.0 (1957)	78.6 (1995)
N	Underclearance		in (mm)	3.62 (92)	3.62 (92)	3.62 (92)	
O	Overall Width		in (mm)	42.5 (1080)	42.5 (1080)	46 (1168)	42.5 (1080)
P	Fork Size		in (mm)	42 x 1.75 x 4 (1067 x 45 x 102)	42 x 1.75 x 4 (1067 x 45 x 102)	42 x 1.5 x 4 (1067 x 38 x 102)	
Q	Fork Spread (outer edge to edge)	L x T x W	in (mm)	13 / 35 (330 / 889)	13 / 35 (330 / 889)	8 / 37 (203 / 940)	
R	Outside Turning Radius	Maximum / Maximum	in (mm)	63 (1600)	63 (1600)	63 (1600)	
	Basic Right Angle Stacking Aisle Width[1]		in (mm)	76.3 (1938)	76.3 (1938)	77.0 (1957)	
	Carriage Width		in (mm)	36 (914)	36 (914)	36 (914)	
	Step Height		in (mm)	9.4 (239)	9.4 (239)	9.4 (239)	

PERFORMANCE DATA				SR1-HPF50 BATTERY COMPARTMENT SIZE 23.75"	SR1-HPT50 BATTERY COMPARTMENT SIZE 23.75"	SR1-HPM50 BATTERY COMPARTMENT SIZE 23.75"	23.75" (NT)
Travel Speed	Maximum		mph (km/h)	8.0 (12.87)	8.0 (12.87)	8.0 (12.87)	
Gradeability		Full Load	%	15	15	15	
Grade Clearance			%	29	29	29	

TRUCK WEIGHTS			SR1-HPF50 BATTERY COMPARTMENT SIZE 23.75"	SR1-HPT50 BATTERY COMPARTMENT SIZE 23.75"	SR1-HPM50 BATTERY COMPARTMENT SIZE 23.75"	23.75" (NT)
Total Weight	Without Battery	lb (kg)	6837 (3101)	7393 (3353)	7753 (3517)	

TIRES				SR1-HPF50 BATTERY COMPARTMENT SIZE 23.75"	SR1-HPT50 BATTERY COMPARTMENT SIZE 23.75"	SR1-HPM50 BATTERY COMPARTMENT SIZE 23.75"	23.75" (NT)
Tires	Tire Type	Front / Rear		Solid Rubber / Polyurethane	Solid Rubber / Polyurethane	Solid Rubber / Polyurethane	
	Number (x = driven)	Front / Rear		2x / 2 (dual steer)	2x / 2 (dual steer)	2x / 2 (dual steer)	
	Lifting	Front (Drive)	in (mm)	16.25 x 7 (413 x 178)	16.25 x 7 (413 x 178)	16.25 x 7 (413 x 178)	
		Rear (Steer)	in (mm)	10 x 5 x 6.5 (254 x 127 x 165) (Dual)	10 x 5 x 6.5 (254 x 127 x 165) (Dual)	10 x 5 x 6.5 (254 x 127 x 165) (Dual)	
Brake Pedal				Plugging / Electric Disc Brake	Plugging / Electric Disc Brake	Plugging / Electric Disc Brake	

POWER SYSTEM				SR1-HPF50 BATTERY COMPARTMENT SIZE 23.75"	SR1-HPT50 BATTERY COMPARTMENT SIZE 23.75"	SR1-HPM50 BATTERY COMPARTMENT SIZE 23.75"	23.75" (NT)
Battery Type				Lead Acid	Lead Acid	Lead Acid	
Battery (6-hour ratings)	Compartment Size (W x L x H)	Maximum	in (mm)	38.5 x 23.75 x 32.3 (978 x 603 x 820)	38.5 x 23.75 x 32.3 (978 x 603 x 820)	38.5 x 23.75 x 32.3 (978 x 603 x 820)	
	Voltage / Capacity	Maximum	V/AH	36 / 1395	36 / 1395	36 / 1395	
	Battery Size (W x L x H)	Maximum	in (mm)	38.5 x 23.5 x 32.3 (978 x 597 x 820)	38.5 x 21.25 x 32.3 (978 x 597 x 820)	38.5 x 21.25 x 32.3 (978 x 597 x 820)	
	Weight	Minimum	lb (kg)	2700 (1226)	2700 (1226)	2700 (1226)	
Motors	Drive			4 Pole Induction AC 3-Phase	4 Pole Induction AC 3-Phase	4 Pole Induction AC 3-Phase	
			hp (kw)	7.0 (5.2)	7.0 (5.2)	7.0 (5.2)	
	Load Handling (Hydraulic)			4 Pole Induction AC 3-Phase	4 Pole Induction AC 3-Phase	4 Pole Induction AC 3-Phase	
			hp (kw)	14.1 (10.5)	14.1 (10.5)	14.1 (10.5)	
	Hydrostatic Power Steering			Permanent Magnet DC	Permanent Magnet DC	Permanent Magnet DC	
Control Type	Drive			Transistor - MOSFET	Transistor - MOSFET	Transistor - MOSFET	
	Load Handling			Transistor - MOSFET	Transistor - MOSFET	Transistor - MOSFET	
	Power Steering			Contactor	Contactor	Contactor	
Operating Pressure		For Attachments	psi (kg / cm²)	2200	2200	2200	
Auxiliary Flow Rate (3rd function)			gpm	2.5	2.5	2.5	
Auxiliary Flow Rate (4th function)			gpm	3 - 10	3 - 10	3 - 10	

1 Includes integral sideshift. Subtract 0.9 inches (23mm) for fixed carriage with no sideshift.
2 Overhead guard height tolerance is 0.5 inch.
3 This vehicle is a 5000 lb. tractor with a 4000 lb. mast.

EXTERIOR DIMENSIONS

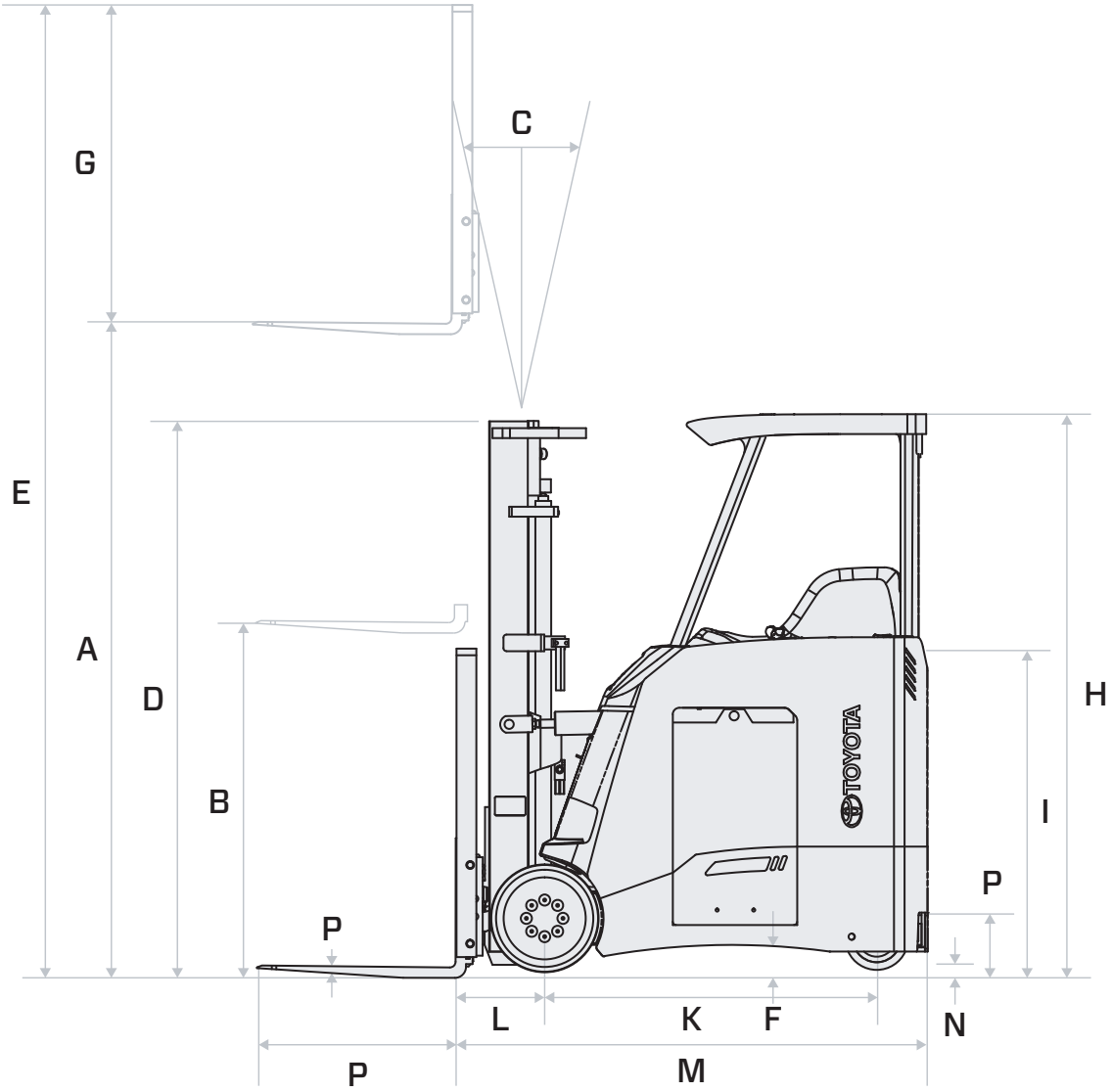

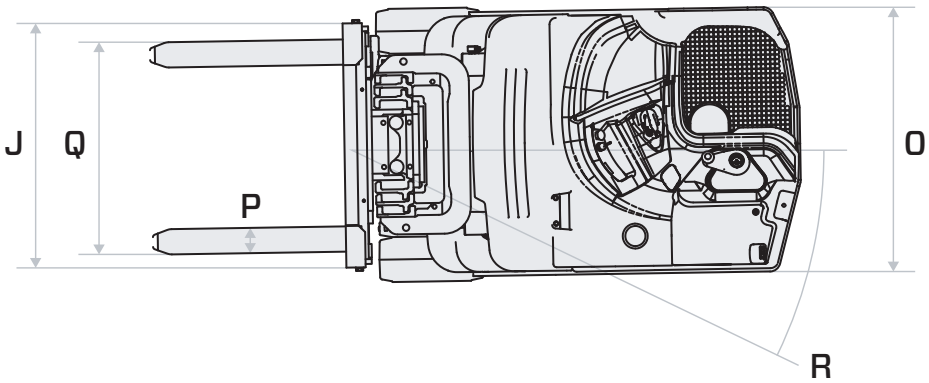

TOYOTA

MAST SPECIFICATIONS

MAST TYPE	MAXIMUM FORK HEIGHT (TOP OF FORKS)	OVERALL HEIGHT			FREE LIFT		TILT RANGE		FIXED CARRIAGE	4" INTEGRAL SS
		LOWERED	EXTENDED							
			WITHOUT LOAD BACKREST[1]	WITH STANDARD LOAD BACKREST	WITHOUT LOAD BACKREST[1]	WITH STANDARD LOAD BACKREST	FWD	BWD	LOAD CAPACITY AT 24 IN (600 MM) LC	LOAD CAPACITY AT 24 IN (600 MM) LC
	in (mm)	in (mm)	in (mm)	in (mm)	in (mm)	in (mm)	deg	deg	lb (kg)	lb (kg)
SR1-HPF30 | SR1-HPT30: 13.5" BATTERY COMPARTMENT										
SR1-HPF30 (FV)	71 (1803)	55 (1397)	91 (2312)	119 (3023)	35 (889)	7 (178)	3	5	3000 (1361)	3000 (1361)
	128 (3251)	83 (2108)	148 (3759)	176 (4470)	63 (1600)	35 (889)	3	5	3000 (1361)	3000 (1361)
	140 (3556)	89 (2261)	160 (4064)	188 (4775)	69 (1752)	41 (1041)	3	5	3000 (1361)	3000 (1361)
SR1-HPT30 (FSW)	188 (4775)	83 (2108)	208 (5283)	236 (5994)	63 (1600)	35 (889)	3	5	2600 (1179)	2600 (1179)
	191 (4851)	84 (2133)	211 (5359)	239 (6070)	64 (1625)	36 (914)	3	5	2550 (1156)	2550 (1156)
	203 (5156)	88 (2235)	223 (5664)	251 (6375)	68 (1727)	40 (1016)	3	5	2450 (1112)	2450 (1112)
	224 (5690)	95 (2413)	244 (6198)	272 (6909)	75 (1905)	47 (1194)	3	5	2450 (1112)	2450 (1112)
	227 (5766)	99 (2515)	247 (6274)	275 (6985)	79 (2006)	51 (1295)	3	5	2200 (998)	2200 (998)

MAST TYPE	MAXIMUM FORK HEIGHT (TOP OF FORKS)	OVERALL HEIGHT			FREE LIFT		TILT RANGE		FIXED CARRIAGE	4" INTEGRAL SS
		LOWERED	EXTENDED							
			WITHOUT LOAD BACKREST[1]	WITH STANDARD LOAD BACKREST	WITHOUT LOAD BACKREST[1]	WITH STANDARD LOAD BACKREST	FWD	BWD	LOAD CAPACITY AT 24 IN (600 MM) LC	LOAD CAPACITY AT 24 IN (600 MM) LC
	in (mm)	in (mm)	in (mm)	in (mm)	in (mm)	in (mm)	deg	deg	lb (kg)	lb (kg)
SR1-HPF30 | SR1-HPT30: 16.5" BATTERY COMPARTMENT										
SR1-HPF30 (FV)	71 (1803)	55 (1397)	91 (2312)	119 (3023)	35 (889)	7 (178)	3	5	3000 (1361)	3000 (1361)
	128 (3251)	83 (2108)	148 (3759)	176 (4470)	63 (1600)	35 (889)	3	5	3000 (1361)	3000 (1361)
	140 (3556)	89 (2261)	160 (4064)	188 (4775)	69 (1752)	41 (1041)	3	5	3000 (1361)	3000 (1361)
SR1-HPT30 (FSW)	188 (4775)	83 (2108)	208 (5283)	236 (5994)	63 (1600)	35 (889)	3	5	2900 (1317)	2700 (1226)
	191 (4851)	84 (2133)	211 (5359)	239 (6070)	64 (1625)	36 (914)	3	5	2850 (1293)	2650 (1202)
	203 (5156)	88 (2235)	223 (5664)	251 (6375)	68 (1727)	40 (1016)	3	5	2800 (1271)	2600 (1179)
	224 (5690)	95 (2413)	244 (6198)	272 (6909)	75 (1905)	47 (1194)	3	5	2800 (1271)	2600 (1179)
	227 (5766)	99 (2515)	247 (6274)	275 (6985)	79 (2006)	51 (1295)	3	5	2600 (1180)	2450 (1112)

MAST TYPE	MAXIMUM FORK HEIGHT (TOP OF FORKS)	OVERALL HEIGHT			FREE LIFT		TILT RANGE		FIXED CARRIAGE	4" INTEGRAL SS
		LOWERED	EXTENDED							
			WITHOUT LOAD BACKREST[1]	WITH STANDARD LOAD BACKREST	WITHOUT LOAD BACKREST[1]	WITH STANDARD LOAD BACKREST	FWD	BWD	LOAD CAPACITY AT 24 IN (600 MM) LC	LOAD CAPACITY AT 24 IN (600 MM) LC
	in (mm)	in (mm)	in (mm)	in (mm)	in (mm)	in (mm)	deg	deg	lb (kg)	lb (kg)
SR1-HPF30 | SR1-HPT30 | SR1-HPM30: 18.5" BATTERY COMPARTMENT[2]										
SR1-HPF30 (FV)	71 (1803)	55 (1397)	91 (2312)	119 (3023)	35 (889)	7 (178)	3	5	3000 (1361)	3000 (1361)
	128 (3251)	83 (2108)	148 (3759)	176 (4470)	63 (1600)	35 (889)	3	5	3000 (1361)	3000 (1361)
	140 (3556)	89 (2261)	160 (4064)	188 (4775)	69 (1752)	41 (1041)	3	5	3000 (1361)	3000 (1361)
SR1-HPT30 (FSW)	188 (4775)	83 (2108)	208 (5283)	236 (5994)	63 (1600)	35 (889)	3	5	3000 (1361)	3000 (1361)
	191 (4851)	84 (2133)	211 (5359)	239 (6070)	64 (1625)	36 (914)	3	5	3000 (1361)	3000 (1361)
	203 (5156)	88 (2235)	223 (5664)	251 (6375)	68 (1727)	40 (1016)	3	5	3000 (1361)	3000 (1361)
	224 (5690)	95 (2413)	244 (6198)	272 (6909)	75 (1905)	47 (1194)	3	5	3000 (1361)	3000 (1361)
	227 (5766)	99 (2515)	247 (6274)	275 (6985)	79 (2006)	51 (1295)	3	5	3000 (1361)	3000 (1361)
	251 (6375)	107 (2718)	271 (6883)	299 (7594)	87 (2210)	59 (1499)	3	5	2750 (1247)	2600 (1179)

1 This dimension is approximate. Dimension will need to be adjusted if any hoses or quick disconnects extend above the carriage.
2 With 2,000 lb. minimum battery weight.
NOTE: Height of standard load backrest is 48 in (1219 mm).
Wide Visible Full-Free Lift Two-Stage Mast (FV), Open View Full-Free Lift Three-Stage Mast (FSW).

MAST TYPE	MAXIMUM FORK HEIGHT (TOP OF FORKS)	OVERALL HEIGHT			FREE LIFT		TILT RANGE		FIXED CARRIAGE	4" INTEGRAL SS
		LOWERED	EXTENDED						LOAD CAPACITY AT 24 IN (600 MM) LC	LOAD CAPACITY AT 24 IN (600 MM) LC
			WITHOUT LOAD BACKREST[1]	WITH STANDARD LOAD BACKREST	WITHOUT LOAD BACKREST[1]	WITH STANDARD LOAD BACKREST	FWD	BWD		
	in (mm)	in (mm)	in (mm)	in (mm)	in (mm)	in (mm)	deg	deg	lb (kg)	lb (kg)
SR1-HPF30 | SR1-HPT30 | SR1-HPM30: 18.5" BATTERY COMPARTMENT[2]										
SR1-HPF30 (FV)	71 (1803)	55 (1397)	91 (2312)	119 (3023)	35 (889)	7 (178)	3	5	3000 (1361)	3000 (1361)
	128 (3251)	83 (2108)	148 (3759)	176 (4470)	63 (1600)	35 (889)	3	5	3000 (1361)	3000 (1361)
	140 (3556)	89 (2261)	160 (4064)	188 (4775)	69 (1752)	41 (1041)	3	5	3000 (1361)	3000 (1361)
SR1-HPT30 (FSW)	188 (4775)	83 (2108)	208 (5283)	236 (5994)	63 (1600)	35 (889)	3	5	3000 (1361)	3000 (1361)
	191 (4851)	84 (2133)	211 (5359)	239 (6070)	64 (1625)	36 (914)	3	5	3000 (1361)	3000 (1361)
	203 (5156)	88 (2235)	223 (5664)	251 (6375)	68 (1727)	40 (1016)	3	5	3000 (1361)	3000 (1361)
	224 (5690)	95 (2413)	244 (6198)	272 (6909)	75 (1905)	47 (1194)	3	5	3000 (1361)	3000 (1361)
	227 (5766)	99 (2515)	247 (6274)	275 (6985)	79 (2006)	51 (1295)	3	5	3000 (1361)	3000 (1361)
	251 (6375)	107 (2718)	271 (6883)	299 (7594)	87 (2210)	59 (1499)	3	5	2950 (1338)	2700 (1225)
SR1-HPM30 (QFV)	240.5 (6109)	83 (2108)	265 (6734)	289 (7341)	63 (1600)	35 (889)	3	5	3000 (1361)	2700 (1225)
	258.5 (6566)	89 (2261)	283 (7191)	307 (7798)	69 (1752)	41 (1041)	3	5	2500 (1134)	2350 (1066)
SR1-HPM30 (QFV) (Narrow Tread)	240.5 (6109)	83 (2108)	265 (6734)	289 (7341)	63 (1600)	35 (889)	3	5	2350 (1066)	2250 (1020)

MAST TYPE	MAXIMUM FORK HEIGHT (TOP OF FORKS)	OVERALL HEIGHT			FREE LIFT		TILT RANGE		FIXED CARRIAGE	4" INTEGRAL SS
		LOWERED	EXTENDED						LOAD CAPACITY AT 24 IN (600 MM) LC	LOAD CAPACITY AT 24 IN (600 MM) LC
			WITHOUT LOAD BACKREST[1]	WITH STANDARD LOAD BACKREST	WITHOUT LOAD BACKREST[1]	WITH STANDARD LOAD BACKREST	FWD	BWD		
	in (mm)	in (mm)	in (mm)	in (mm)	in (mm)	in (mm)	deg	deg	lb (kg)	lb (kg)
SR1-HPF35 | SR1-HPT35: 13.5" BATTERY COMPARTMENT										
SR1-HPF35 (FV)	71 (1803)	55 (1397)	55 (1397)	91 (2312)	119 (3023)	7 (178)	3	5	3500 (1588)	3500 (1588)
	128 (3251)	83 (2108)	83 (2108)	148 (3759)	176 (4470)	35 (889)	3	5	3500 (1588)	3500 (1588)
	140 (3556)	89 (2261)	89 (2261)	160 (4064)	188 (4775)	41 (1041)	3	5	3500 (1588)	3500 (1588)
SR1-HPT35 (FSW)	188 (4775)	83 (2108)	83 (2108)	208 (5283)	236 (5994)	35 (889)	3	5	2900 (1317)	2900 (1317)
	191 (4851)	84 (2133)	84 (2133)	211 (5359)	239 (6070)	36 (914)	3	5	2850 (1293)	2850 (1293)
	203 (5156)	88 (2235)	88 (2235)	223 (5664)	251 (6375)	40 (1016)	3	5	2750 (1247)	2750 (1247)
	224 (5690)	95 (2413)	95 (2413)	244 (6198)	272 (6909)	47 (1194)	3	5	2750 (1247)	2750 (1247)
	227 (5766)	99 (2515)	99 (2515)	247 (6274)	275 (6985)	51 (1295)	3	5	2500 (1134)	2500 (1134)

MAST TYPE	MAXIMUM FORK HEIGHT (TOP OF FORKS)	OVERALL HEIGHT			FREE LIFT		TILT RANGE		FIXED CARRIAGE	4" INTEGRAL SS
		LOWERED	EXTENDED						LOAD CAPACITY AT 24 IN (600 MM) LC	LOAD CAPACITY AT 24 IN (600 MM) LC
			WITHOUT LOAD BACKREST[1]	WITH STANDARD LOAD BACKREST	WITHOUT LOAD BACKREST[1]	WITH STANDARD LOAD BACKREST	FWD	BWD		
	in (mm)	in (mm)	in (mm)	in (mm)	in (mm)	in (mm)	deg	deg	lb (kg)	lb (kg)
SR1-HPF35 | SR1-HPT35: 16.5" BATTERY COMPARTMENT										
SR1-HPF35 (FV)	71 (1803)	55 (1397)	55 (1397)	91 (2312)	119 (3023)	7 (178)	3	5	3500 (1588)	3500 (1588)
	128 (3251)	83 (2108)	83 (2108)	148 (3759)	176 (4470)	35 (889)	3	5	3500 (1588)	3500 (1588)
	140 (3556)	89 (2261)	89 (2261)	160 (4064)	188 (4775)	41 (1041)	3	5	3500 (1588)	3500 (1588)
SR1-HPT35 (FSW)	188 (4775)	83 (2108)	83 (2108)	208 (5283)	236 (5994)	35 (889)	3	5	3300 (1497)	3075 (1396)
	191 (4851)	84 (2133)	84 (2133)	211 (5359)	239 (6070)	36 (914)	3	5	3250 (1474)	3050 (1383)
	203 (5156)	88 (2235)	88 (2235)	223 (5664)	251 (6375)	40 (1016)	3	5	3200 (1451)	2950 (1339)
	224 (5690)	95 (2413)	95 (2413)	244 (6198)	272 (6909)	47 (1194)	3	5	3200 (1451)	2950 (1339)
	227 (5766)	99 (2515)	99 (2515)	247 (6274)	275 (6985)	51 (1295)	3	5	2700 (1226)	2700 (1226)

1 This dimension is approximate. Dimension will need to be adjusted if any hoses or quick disconnects extend above the carriage.
2 With 2,300 lb. minimum battery weight.
NOTE: Height of standard load backrest is 48 in (1219 mm).
Wide Visible Full-Free Lift Two-Stage Mast (FV), Open View Full-Free Lift Three-Stage Mast (FSW).

MAST SPECIFICATIONS

MAST TYPE	MAXIMUM FORK HEIGHT (TOP OF FORKS)	OVERALL HEIGHT			FREE LIFT		TILT RANGE		FIXED CARRIAGE	4" INTEGRAL SS
		LOWERED	EXTENDED							
			WITHOUT LOAD BACKREST[1]	WITH STANDARD LOAD BACKREST	WITHOUT LOAD BACKREST[1]	WITH STANDARD LOAD BACKREST	FWD	BWD	LOAD CAPACITY AT 24 IN (600 MM) LC	LOAD CAPACITY AT 24 IN (600 MM) LC
	in (mm)	in (mm)	in (mm)	in (mm)	in (mm)	in (mm)	deg	deg	lb (kg)	lb (kg)
SR1-HPF35 | SR1-HPT35 | SR1-HPM35: 18.5" BATTERY COMPARTMENT[2]										
SR1-HPF35 (FV)	71 (1803)	55 (1397)	91 (2312)	119 (3023)	35 (889)	7 (178)	3	5	3500 (1588)	3500 (1588)
	128 (3251)	83 (2108)	148 (3759)	176 (4470)	63 (1600)	35 (889)	3	5	3500 (1588)	3500 (1588)
	140 (3556)	89 (2261)	160 (4064)	188 (4775)	69 (1752)	41 (1041)	3	5	3500 (1588)	3500 (1588)
SR1-HPT35 (FSW)	188 (4775)	83 (2108)	208 (5283)	236 (5994)	63 (1600)	35 (889)	3	5	3500 (1588)	3500 (1588)
	191 (4851)	84 (2133)	211 (5359)	239 (6070)	64 (1625)	36 (914)	3	5	3500 (1588)	3450 (1565)
	203 (5156)	88 (2235)	223 (5664)	251 (6375)	68 (1727)	40 (1016)	3	5	3500 (1588)	3300 (1497)
	224 (5690)	95 (2413)	244 (6198)	272 (6909)	75 (1905)	47 (1194)	3	5	3500 (1588)	3200 (1452)
	227 (5766)	99 (2515)	247 (6274)	275 (6985)	79 (2006)	51 (1295)	3	5	3350 (1520)	3050 (1384)
	251 (6375)	107 (2718)	271 (6883)	299 (7594)	87 (2210)	59 (1499)	3	5	2750 (1247)	2600 (1179)

MAST TYPE	MAXIMUM FORK HEIGHT (TOP OF FORKS)	OVERALL HEIGHT			FREE LIFT		TILT RANGE		FIXED CARRIAGE	4" INTEGRAL SS
		LOWERED	EXTENDED							
			WITHOUT LOAD BACKREST[1]	WITH STANDARD LOAD BACKREST	WITHOUT LOAD BACKREST[1]	WITH STANDARD LOAD BACKREST	FWD	BWD	LOAD CAPACITY AT 24 IN (600 MM) LC	LOAD CAPACITY AT 24 IN (600 MM) LC
	in (mm)	in (mm)	in (mm)	in (mm)	in (mm)	in (mm)	deg	deg	lb (kg)	lb (kg)
SR1-HPF35 | SR1-HPT35 | SR1-HPM35: 18.5" BATTERY COMPARTMENT[3]										
SR1-HPF35 (FV)	71 (1803)	55 (1397)	91 (2312)	119 (3023)	35 (889)	7 (178)	3	5	3500 (1588)	3500 (1588)
	128 (3251)	83 (2108)	148 (3759)	176 (4470)	63 (1600)	35 (889)	3	5	3500 (1588)	3500 (1588)
	140 (3556)	89 (2261)	160 (4064)	188 (4775)	69 (1752)	41 (1041)	3	5	3500 (1588)	3500 (1588)
SR1-HPT35 (FSW)	188 (4775)	83 (2108)	208 (5283)	236 (5994)	63 (1600)	35 (889)	3	5	3500 (1588)	3500 (1588)
	191 (4851)	84 (2133)	211 (5359)	239 (6070)	64 (1625)	36 (914)	3	5	3500 (1588)	3500 (1588)
	203 (5156)	88 (2235)	223 (5664)	251 (6375)	68 (1727)	40 (1016)	3	5	3500 (1588)	3350 (1523)
	224 (5690)	95 (2413)	244 (6198)	272 (6909)	75 (1905)	47 (1194)	3	5	3500 (1588)	3350 (1523)
	227 (5766)	99 (2515)	247 (6274)	275 (6985)	79 (2006)	51 (1295)	3	5	3400 (1542)	3050 (1383)
	251 (6375)	107 (2718)	271 (6883)	299 (7594)	87 (2210)	59 (1499)	3	5	2950 (1338)	2700 (1225)
SR1-HPM35 (QFV)	240.5 (6109)	83 (2108)	265 (6734)	289 (7341)	63 (1600)	35 (889)	3	5	3300 (1497)	2975 (1349)
	258.5 (6566)	89 (2261)	283 (7191)	307 (7798)	69 (1752)	41 (1041)	3	5	2500 (1134)	2350 (1066)
SR1-HPM35 (QFV) (Narrow Tread)	240.5 (6109)	83 (2108)	265 (6734)	289 (7341)	63 (1600)	35 (889)	3	5	2350 (1066)	2250 (1020)

MAST TYPE	MAXIMUM FORK HEIGHT (TOP OF FORKS)	OVERALL HEIGHT			FREE LIFT		TILT RANGE		FIXED CARRIAGE	4" INTEGRAL SS
		LOWERED	EXTENDED							
			WITHOUT LOAD BACKREST[1]	WITH STANDARD LOAD BACKREST	WITHOUT LOAD BACKREST[1]	WITH STANDARD LOAD BACKREST	FWD	BWD	LOAD CAPACITY AT 24 IN (600 MM) LC	LOAD CAPACITY AT 24 IN (600 MM) LC
	in (mm)	in (mm)	in (mm)	in (mm)	in (mm)	in (mm)	deg	deg	lb (kg)	lb (kg)
SR1-HPF40 | SR1-HPT40 | SR1-HPM40: 18.5" BATTERY COMPARTMENT[3]										
SR1-HPF40 (FV)	71 (1803)	55 (1397)	91 (2312)	119 (3023)	35 (889)	7 (178)	3	5	4000 (1814)	3675 (1666)
	128 (3251)	83 (2108)	148 (3759)	176 (4470)	63 (1600)	35 (889)	3	5	4000 (1814)	3675 (1666)
	140 (3556)	89 (2261)	160 (4064)	188 (4775)	69 (1752)	41 (1041)	3	5	4000 (1814)	3675 (1666)
SR1-HPT40 (FSW)	188 (4775)	83 (2108)	208 (5283)	236 (5994)	63 (1600)	35 (889)	3	5	4000 (1814)	4000 (1814)
	191 (4851)	84 (2133)	211 (5359)	239 (6070)	64 (1625)	36 (914)	3	5	3500 (1588)	3500 (1588)
	203 (5156)	88 (2235)	223 (5664)	251 (6375)	68 (1727)	40 (1016)	3	5	3500 (1588)	3350 (1523)
	224 (5690)	95 (2413)	244 (6198)	272 (6909)	75 (1905)	47 (1194)	3	5	3400 (1542)	3050 (1384)
	227 (5766)	99 (2515)	247 (6274)	275 (6985)	79 (2006)	51 (1295)	3	5	3400 (1542)	3050 (1384)
	251 (6375)	107 (2718)	271 (6883)	299 (7594)	87 (2210)	59 (1499)	3	5	2950 (1338)	2700 (1225)
SR1-HPM40 (QFV)	240.5 (6109)	83 (2108)	265 (6734)	289 (7341)	63 (1600)	35 (889)	3	5	3300 (1497)	2975 (1349)
	258.5 (6566)	89 (2261)	283 (7191)	307 (7798)	69 (1752)	41 (1041)	3	5	2500 (1134)	2350 (1066)
SR1-HPM40 (QFV) (Narrow Tread)	240.5 (6109)	83 (2108)	265 (6734)	289 (7341)	63 (1600)	35 (889)	3	5	2350 (1066)	2250 (1020)

1 This dimension is approximate. Dimension will need to be adjusted if any hoses or quick disconnects extend above the carriage.
2 With 2,000 lb. minimum battery weight.
3 With 2,300 lb. minimum battery weight.
NOTE: Height of standard load backrest is 48 in (1219 mm).
Wide Visible Full-Free Lift Two-Stage Mast (FV), Open View Full-Free Lift Three-Stage Mast (FSW).

MAST TYPE	MAXIMUM FORK HEIGHT (TOP OF FORKS)	OVERALL HEIGHT			FREE LIFT		TILT RANGE		FIXED CARRIAGE	4" INTEGRAL SS
		LOWERED	EXTENDED						LOAD CAPACITY AT 24 IN (600 MM) LC	LOAD CAPACITY AT 24 IN (600 MM) LC
			WITHOUT LOAD BACKREST[1]	WITH STANDARD LOAD BACKREST	WITHOUT LOAD BACKREST[1]	WITH STANDARD LOAD BACKREST	FWD	BWD		
	in (mm)	in (mm)	in (mm)	in (mm)	in (mm)	in (mm)	deg	deg	lb (kg)	lb (kg)
SR1-HPF40 | SR1-HPT40 | SR1-HPM40: 21.25" BATTERY COMPARTMENT[2]										
SR1-HPF40 (FV)	71 (1803)	55 (1397)	91 (2312)	119 (3023)	35 (889)	7 (178)	3	5	4000 (1814)	3675 (1666)
	128 (3251)	83 (2108)	148 (3759)	176 (4470)	63 (1600)	35 (889)	3	5	4000 (1814)	3675 (1666)
	140 (3556)	89 (2261)	160 (4064)	188 (4775)	69 (1752)	41 (1041)	3	5	4000 (1814)	3675 (1666)
SR1-HPT40 (FSW)	188 (4775)	83 (2108)	208 (5283)	236 (5994)	63 (1600)	35 (889)	3	5	4000 (1814)	4000 (1814)
	191 (4851)	84 (2133)	211 (5359)	239 (6070)	64 (1625)	36 (914)	3	5	4000 (1814)	4000 (1814)
	203 (5156)	88 (2235)	223 (5664)	251 (6375)	68 (1727)	40 (1016)	3	5	4000 (1814)	4000 (1814)
	224 (5690)	95 (2413)	244 (6198)	272 (6909)	75 (1905)	47 (1194)	3	5	3800 (1724)	3450 (1565)
	227 (5766)	99 (2515)	247 (6274)	275 (6985)	79 (2006)	51 (1295)	3	5	3000 (1361)	2750 (1247)
	251 (6375)	107 (2718)	271 (6883)	299 (7594)	87 (2210)	59 (1499)	3	5	3000 (1361)	2750 (1247)
SR1-HPM40 (QFV)	240.5 (6109)	83 (2108)	265 (6734)	289 (7341)	63 (1600)	35 (889)	3	5	3300 (1497)	2975 (1349)
	258.5 (6566)	89 (2261)	283 (7191)	307 (7798)	69 (1752)	41 (1041)	3	5	3110 (1411)	2800 (1270)
SR1-HPM40 (QFV) (Narrow Tread)	240.5 (6109)	83 (2108)	265 (6734)	289 (7341)	63 (1600)	35 (889)	3	5	2500 (1134)	2400 (1089)
	258.5 (6566)	89 (2261)	283 (7191)	307 (7798)	69 (1752)	41 (1041)	3	5	2500 (1134)	2400 (1089)

MAST TYPE	MAXIMUM FORK HEIGHT (TOP OF FORKS)	OVERALL HEIGHT			FREE LIFT		TILT RANGE		FIXED CARRIAGE	4" INTEGRAL SS
		LOWERED	EXTENDED						LOAD CAPACITY AT 24 IN (600 MM) LC	LOAD CAPACITY AT 24 IN (600 MM) LC
			WITHOUT LOAD BACKREST[1]	WITH STANDARD LOAD BACKREST	WITHOUT LOAD BACKREST[1]	WITH STANDARD LOAD BACKREST	FWD	BWD		
	in (mm)	in (mm)	in (mm)	in (mm)	in (mm)	in (mm)	deg	deg	lb (kg)	lb (kg)
SR1-HPF50 | SR1-HPT50 | SR1-HPM50: 23.5" BATTERY COMPARTMENT[3]										
SR1-HPF50 (FV)	136 (3454)	89 (2261)	156 (3963)	184 (4674)	69 (1752)	41 (1041)	3	5	4000 (1814)	3675 (1666)
SR1-HPT50 (FSW)	188 (4775)	83 (2108)	208 (5283)	236 (5994)	63 (1600)	35 (889)	3	5	5000 (2268)	4700 (2131)
	191 (4851)	84 (2133)	211 (5359)	239 (6070)	64 (1625)	36 (914)	3	5	4900 (2222)	4600 (2086)
	203 (5156)	88 (2235)	223 (5664)	251 (6375)	68 (1727)	40 (1016)	3	5	4600 (2086)	4500 (2041)
	224 (5690)	95 (2413)	244 (6198)	272 (6909)	75 (1905)	47 (1194)	3	5	4100 (1860)	4000 (1814)
	227 (5766)	99 (2515)	247 (6274)	275 (6985)	79 (2006)	51 (1295)	3	5	4100 (1860)	4000 (1814)
	251 (6375)	107 (2718)	271 (6883)	299 (7594)	87 (2210)	59 (1499)	3	5	3000 (1361)	3000 (1361)
SR1-HPM50 (QFV)	240.5 (6109)	83 (2108)	265 (6734)	289 (7341)	63 (1600)	35 (889)	3	5	3300 (1497)	2975 (1349)
	258.5 (6566)	89 (2261)	283 (7191)	307 (7798)	69 (1752)	41 (1041)	3	5	3110 (1411)	2800 (1270)
	270.5 (6871)	93.5 (2375)	291 (7391)	319 (8102)	73 (1854)	45 (1143)	3	5	2800 (1270)	2600 (1179)
SR1-HPM50 (QFV) (Narrow Tread)	240.5 (6109)	83 (2108)	265 (6734)	289 (7341)	63 (1600)	35 (889)	3	5	2850 (1293)	2750 (1247)
	258.5 (6566)	89 (2261)	283 (7191)	307 (7798)	69 (1752)	41 (1041)	3	5	2800 (1270)	2700 (1225)
	270.5 (6871)	93.5 (2375)	291 (7391)	319 (8102)	73 (1854)	45 (1143)	3	5	2700 (1225)	2600 (1179)

MAST TYPE	MAXIMUM FORK HEIGHT (TOP OF FORKS)	OVERALL HEIGHT			FREE LIFT		TILT RANGE		FIXED CARRIAGE	4" INTEGRAL SS
		LOWERED	EXTENDED						LOAD CAPACITY AT 24 IN (600 MM) LC	LOAD CAPACITY AT 24 IN (600 MM) LC
			WITHOUT LOAD BACKREST[1]	WITH STANDARD LOAD BACKREST	WITHOUT LOAD BACKREST[1]	WITH STANDARD LOAD BACKREST	FWD	BWD		
	in (mm)	in (mm)	in (mm)	in (mm)	in (mm)	in (mm)	deg	deg	lb (kg)	lb (kg)
SR1-BEF30 | SR1-BET30: 13.5" BATTERY COMPARTMENT										
SR1-BEF30 (FV)	71 (1803)	55 (1397)	95 (2416)	119 (3023)	31 (785)	7 (178)	3	5	3000 (1361)	3000 (1361)
	128 (3251)	83 (2108)	151 (3838)	175 (4445)	59 (1496)	35 (889)	3	5	3000 (1361)	3000 (1361)
	140 (3556)	89 (2261)	161 (4092)	185 (4699)	64 (1623)	40 (1016)	3	5	3000 (1361)	3000 (1361)
SR1-BET30 (FSW)	188 (4775)	83 (2108)	212 (5387)	236 (5994)	59 (1496)	35 (889)	3	5	2600 (1179)	2600 (1179)
	191 (4851)	84 (2133)	215 (5463)	239 (6070)	60 (1521)	36 (914)	3	5	2550 (1156)	2550 (1156)
	203 (5156)	88 (2235)	227 (5768)	251 (6375)	64 (1623)	40 (1016)	3	5	2450 (1112)	2450 (1112)
	224 (5690)	95 (2413)	248 (6302)	272 (6909)	71 (1801)	47 (1194)	3	5	2450 (1112)	2450 (1112)
	227 (5766)	99 (2515)	251 (6378)	275 (6985)	72 (1826)	48 (1219)	3	5	2200 (998)	2200 (998)

1 This dimension is approximate. Dimension will need to be adjusted if any hoses or quick disconnects extend above the carriage.
2 With 2,593 lb. minimum battery weight.
3 With 2,700 lb. minimum battery weight.
NOTE: Height of standard load backrest is 48 in (1219 mm).
Wide Visible Full-Free Lift Two-Stage Mast (FV), Open View Full-Free Lift Three-Stage Mast (FSW).

MAST SPECIFICATIONS

MAST TYPE	MAXIMUM FORK HEIGHT (TOP OF FORKS)	OVERALL HEIGHT			FREE LIFT		TILT RANGE		FIXED CARRIAGE	4" INTEGRAL SS
		LOWERED	EXTENDED							
			WITHOUT LOAD BACKREST[1]	WITH STANDARD LOAD BACKREST	WITHOUT LOAD BACKREST[1]	WITH STANDARD LOAD BACKREST	FWD	BWD	LOAD CAPACITY AT 24 IN (600 MM) LC	LOAD CAPACITY AT 24 IN (600 MM) LC
	in (mm)	in (mm)	in (mm)	in (mm)	in (mm)	in (mm)	deg	deg	lb (kg)	lb (kg)
SR1-BEF30 | SR1-BET30: 16.5" BATTERY COMPARTMENT										
SR1-BEF30 (FV)	71 (1803)	55 (1397)	95 (2416)	119 (3023)	31 (785)	7 (178)	3	5	3000 (1361)	3000 (1361)
	128 (3251)	83 (2108)	151 (3838)	175 (4445)	59 (1496)	35 (889)	3	5	3000 (1361)	3000 (1361)
	140 (3556)	89 (2261)	161 (4092)	185 (4699)	64 (1623)	40 (1016)	3	5	3000 (1361)	3000 (1361)
SR1-BET30 (FSW)	188 (4775)	83 (2108)	212 (5387)	236 (5994)	59 (1496)	35 (889)	3	5	2900 (1317)	2700 (1226)
	191 (4851)	84 (2133)	215 (5463)	239 (6070)	60 (1521)	36 (914)	3	5	2850 (1293)	2650 (1202)
	203 (5156)	88 (2235)	227 (5768)	251 (6375)	64 (1623)	40 (1016)	3	5	2800 (1271)	2600 (1179)
	224 (5690)	95 (2413)	248 (6302)	272 (6909)	71 (1801)	47 (1194)	3	5	2800 (1271)	2600 (1179)
	227 (5766)	99 (2515)	251 (6378)	275 (6985)	72 (1826)	48 (1219)	3	5	2600 (1180)	2450 (1112)

MAST TYPE	MAXIMUM FORK HEIGHT (TOP OF FORKS)	OVERALL HEIGHT			FREE LIFT		TILT RANGE		FIXED CARRIAGE	4" INTEGRAL SS
		LOWERED	EXTENDED							
			WITHOUT LOAD BACKREST[1]	WITH STANDARD LOAD BACKREST	WITHOUT LOAD BACKREST[1]	WITH STANDARD LOAD BACKREST	FWD	BWD	LOAD CAPACITY AT 24 IN (600 MM) LC	LOAD CAPACITY AT 24 IN (600 MM) LC
	in (mm)	in (mm)	in (mm)	in (mm)	in (mm)	in (mm)	deg	deg	lb (kg)	lb (kg)
SR1-BEF30 | SR1-BET30: 18.5" BATTERY COMPARTMENT										
SR1-BEF30 (FV)	71 (1803)	55 (1397)	95 (2416)	119 (3023)	31 (785)	7 (178)	3	5	3000 (1361)	3000 (1361)
	128 (3251)	83 (2108)	151 (3838)	175 (4445)	59 (1496)	35 (889)	3	5	3000 (1361)	3000 (1361)
	140 (3556)	89 (2261)	161 (4092)	185 (4699)	64 (1623)	40 (1016)	3	5	3000 (1361)	3000 (1361)
SR1-BET30 (FSW)	188 (4775)	83 (2108)	212 (5387)	236 (5994)	59 (1496)	35 (889)	3	5	2900 (1317)	2700 (1226)
	191 (4851)	84 (2133)	215 (5463)	239 (6070)	60 (1521)	36 (914)	3	5	2850 (1293)	2650 (1202)
	203 (5156)	88 (2235)	227 (5768)	251 (6375)	64 (1623)	40 (1016)	3	5	2800 (1271)	2600 (1179)
	224 (5690)	95 (2413)	248 (6302)	272 (6909)	71 (1801)	47 (1194)	3	5	2800 (1271)	2600 (1179)
	227 (5766)	99 (2515)	251 (6378)	275 (6985)	72 (1826)	48 (1219)	3	5	2600 (1180)	2450 (1112)

MAST TYPE	MAXIMUM FORK HEIGHT (TOP OF FORKS)	OVERALL HEIGHT			FREE LIFT		TILT RANGE		FIXED CARRIAGE	4" INTEGRAL SS
		LOWERED	EXTENDED							
			WITHOUT LOAD BACKREST[1]	WITH STANDARD LOAD BACKREST	WITHOUT LOAD BACKREST[1]	WITH STANDARD LOAD BACKREST	FWD	BWD	LOAD CAPACITY AT 24 IN (600 MM) LC	LOAD CAPACITY AT 24 IN (600 MM) LC
	in (mm)	in (mm)	in (mm)	in (mm)	in (mm)	in (mm)	deg	deg	lb (kg)	lb (kg)
SR1-BEF35 | SR1-BET35: 13.5" BATTERY COMPARTMENT										
SR1-BEF35 (FV)	71 (1803)	55 (1397)	95 (2416)	119 (3023)	31 (785)	7 (178)	3	5	3500 (1588)	3500 (1588)
	128 (3251)	83 (2108)	151 (3838)	175 (4445)	59 (1496)	35 (889)	3	5	3500 (1588)	3500 (1588)
	140 (3556)	89 (2261)	161 (4092)	185 (4699)	64 (1623)	40 (1016)	3	5	3500 (1588)	3500 (1588)
SR1-BET35 (FSW)	188 (4775)	83 (2108)	212 (5387)	236 (5994)	59 (1496)	35 (889)	3	5	2900 (1317)	2900 (1317)
	191 (4851)	84 (2133)	215 (5463)	239 (6070)	60 (1521)	36 (914)	3	5	2850 (1293)	2850 (1293)
	203 (5156)	88 (2235)	227 (5768)	251 (6375)	64 (1623)	40 (1016)	3	5	2750 (1247)	2750 (1247)
	224 (5690)	95 (2413)	248 (6302)	272 (6909)	71 (1801)	47 (1194)	3	5	2750 (1247)	2750 (1247)
	227 (5766)	99 (2515)	251 (6378)	275 (6985)	72 (1826)	48 (1219)	3	5	2500 (1134)	2500 (1134)

MAST TYPE	MAXIMUM FORK HEIGHT (TOP OF FORKS)	OVERALL HEIGHT			FREE LIFT		TILT RANGE		FIXED CARRIAGE	4" INTEGRAL SS
		LOWERED	EXTENDED							
			WITHOUT LOAD BACKREST[1]	WITH STANDARD LOAD BACKREST	WITHOUT LOAD BACKREST[1]	WITH STANDARD LOAD BACKREST	FWD	BWD	LOAD CAPACITY AT 24 IN (600 MM) LC	LOAD CAPACITY AT 24 IN (600 MM) LC
	in (mm)	in (mm)	in (mm)	in (mm)	in (mm)	in (mm)	deg	deg	lb (kg)	lb (kg)
SR1-BEF35 | SR1-BET35: 16.5" BATTERY COMPARTMENT										
SR1-BEF35 (FV)	71 (1803)	55 (1397)	95 (2416)	119 (3023)	31 (785)	7 (178)	3	5	3500 (1588)	3500 (1588)
	128 (3251)	83 (2108)	151 (3838)	175 (4445)	59 (1496)	35 (889)	3	5	3500 (1588)	3500 (1588)
	140 (3556)	89 (2261)	161 (4092)	185 (4699)	64 (1623)	40 (1016)	3	5	3500 (1588)	3500 (1588)
SR1-BET35 (FSW)	188 (4775)	83 (2108)	212 (5387)	236 (5994)	59 (1496)	35 (889)	3	5	3300 (1498)	3075 (1396)
	191 (4851)	84 (2133)	215 (5463)	239 (6070)	60 (1521)	36 (914)	3	5	3250 (1474)	3050 (1383)
	203 (5156)	88 (2235)	227 (5768)	251 (6375)	64 (1623)	40 (1016)	3	5	3200 (1451)	2950 (1339)
	224 (5690)	95 (2413)	248 (6302)	272 (6909)	71 (1801)	47 (1194)	3	5	3200 (1451)	2950 (1339)
	227 (5766)	99 (2515)	251 (6378)	275 (6985)	72 (1826)	48 (1219)	3	5	2700 (1226)	2700 (1226)

1 This dimension is approximate. Dimension will need to be adjusted if any hoses or quick disconnects extend above the carriage.
NOTE: Height of standard load backrest is 48 in (1219 mm).
Wide Visible Full-Free Lift Two-Stage Mast (FV), Open View Full-Free Lift Three-Stage Mast (FSW)

MAST TYPE	MAXIMUM FORK HEIGHT (TOP OF FORKS)	OVERALL HEIGHT			FREE LIFT		TILT RANGE		FIXED CARRIAGE	4" INTEGRAL SS
		LOWERED	EXTENDED							
			WITHOUT LOAD BACKREST[1]	WITH STANDARD LOAD BACKREST	WITHOUT LOAD BACKREST[1]	WITH STANDARD LOAD BACKREST	FWD	BWD	LOAD CAPACITY AT 24 IN (600 MM) LC	LOAD CAPACITY AT 24 IN (600 MM) LC
	in (mm)	in (mm)	in (mm)	in (mm)	in (mm)	in (mm)	deg	deg	lb (kg)	lb (kg)
SR1-BEF35 | SR1-BET35: 18.5" BATTERY COMPARTMENT										
SR1-BEF35 (FV)	71 (1803)	55 (1397)	95 (2416)	119 (3023)	31 (785)	7 (178)	3	5	3500 (1588)	3500 (1588)
	128 (3251)	83 (2108)	151 (3838)	175 (4445)	59 (1496)	35 (889)	3	5	3500 (1588)	3500 (1588)
	140 (3556)	89 (2261)	161 (4092)	185 (4699)	64 (1623)	40 (1016)	3	5	3500 (1588)	3500 (1588)
SR1-BET35 (FSW)	188 (4775)	83 (2108)	212 (5387)	236 (5994)	59 (1496)	35 (889)	3	5	3300 (1498)	3075 (1396)
	191 (4851)	84 (2133)	215 (5463)	239 (6070)	60 (1521)	36 (914)	3	5	3250 (1474)	3050 (1383)
	203 (5156)	88 (2235)	227 (5768)	251 (6375)	64 (1623)	40 (1016)	3	5	3200 (1451)	2950 (1339)
	224 (5690)	95 (2413)	248 (6302)	272 (6909)	71 (1801)	47 (1194)	3	5	3200 (1451)	2950 (1339)
	227 (5766)	99 (2515)	251 (6378)	275 (6985)	72 (1826)	48 (1219)	3	5	2700 (1226)	2700 (1226)

MAST TYPE	MAXIMUM FORK HEIGHT (TOP OF FORKS)	OVERALL HEIGHT			FREE LIFT		TILT RANGE		FIXED CARRIAGE	4" INTEGRAL SS
		LOWERED	EXTENDED							
			WITHOUT LOAD BACKREST[1]	WITH STANDARD LOAD BACKREST	WITHOUT LOAD BACKREST[1]	WITH STANDARD LOAD BACKREST	FWD	BWD	LOAD CAPACITY AT 24 IN (600 MM) LC	LOAD CAPACITY AT 24 IN (600 MM) LC
	in (mm)	in (mm)	in (mm)	in (mm)	in (mm)	in (mm)	deg	deg	lb (kg)	lb (kg)
SR1-BEF40 | SR1-BET40: 18.5" BATTERY COMPARTMENT										
SR1-BEF40 (FV)	71 (1803)	55 (1397)	95 (2416)	119 (3023)	31 (785)	7 (178)	3	5	4000 (1814)	4000 (1814)
	128 (3251)	83 (2108)	151 (3838)	175 (4445)	59 (1496)	35 (889)	3	5	4000 (1814)	4000 (1814)
	140 (3556)	89 (2261)	161 (4092)	185 (4699)	64 (1623)	40 (1016)	3	5	4000 (1814)	4000 (1814)
SR1-BET40 (FSW)	188 (4775)	83 (2108)	212 (5387)	236 (5994)	59 (1496)	35 (889)	3	5	3300 (1498)	3075 (1396)
	191 (4851)	84 (2133)	215 (5463)	239 (6070)	60 (1521)	36 (914)	3	5	3250 (1474)	3050 (1383)
	203 (5156)	88 (2235)	227 (5768)	251 (6375)	64 (1623)	40 (1016)	3	5	3200 (1451)	2950 (1339)
	224 (5690)	95 (2413)	248 (6302)	272 (6909)	71 (1801)	47 (1194)	3	5	3200 (1451)	2950 (1339)
	227 (5766)	99 (2515)	251 (6378)	275 (6985)	72 (1826)	48 (1219)	3	5	2400 (1226)	2700 (1226)

MAST TYPE	MAXIMUM FORK HEIGHT (TOP OF FORKS)	OVERALL HEIGHT			FREE LIFT		TILT RANGE		FIXED CARRIAGE	4" INTEGRAL SS
		LOWERED	EXTENDED							
			WITHOUT LOAD BACKREST[1]	WITH STANDARD LOAD BACKREST	WITHOUT LOAD BACKREST[1]	WITH STANDARD LOAD BACKREST	FWD	BWD	LOAD CAPACITY AT 24 IN (600 MM) LC	LOAD CAPACITY AT 24 IN (600 MM) LC
	in (mm)	in (mm)	in (mm)	in (mm)	in (mm)	in (mm)	deg	deg	lb (kg)	lb (kg)
SR1-BEF40 | SR1-BET40: 21.25" BATTERY COMPARTMENT										
SR1-BEF40 (FV)	71 (1803)	55 (1397)	95 (2416)	119 (3023)	31 (785)	7 (178)	3	5	4000 (1814)	4000 (1814)
	128 (3251)	83 (2108)	151 (3838)	175 (4445)	59 (1496)	35 (889)	3	5	4000 (1814)	4000 (1814)
	140 (3556)	89 (2261)	161 (4092)	185 (4699)	64 (1623)	40 (1016)	3	5	4000 (1814)	4000 (1814)
SR1-BET40 (FSW)	188 (4775)	83 (2108)	212 (5387)	236 (5994)	59 (1496)	35 (889)	3	5	4000 (1814)	3800 (1724)
	191 (4851)	84 (2133)	215 (5463)	239 (6070)	60 (1521)	36 (914)	3	5	3900 (1769)	3700 (1678)
	203 (5156)	88 (2235)	227 (5768)	251 (6375)	64 (1623)	40 (1016)	3	5	3700 (1678)	3500 (1588)
	224 (5690)	95 (2413)	248 (6302)	272 (6909)	71 (1801)	47 (1194)	3	5	3700 (1678)	3500 (1588)
	227 (5766)	99 (2515)	251 (6378)	275 (6985)	72 (1826)	48 (1219)	3	5	3500 (1588)	3300 (1497)

1 This dimension is approximate. Dimension will need to be adjusted if any hoses or quick disconnects extend above the carriage.
NOTE: Height of standard load backrest is 48 in (1219 mm).
Wide Visible Full-Free Lift Two-Stage Mast (FV), Open View Full-Free Lift Three-Stage Mast (FSW)

TOYOTA
MATERIAL HANDLING

"I'M HERE TO MAKE SURE YOUR FORKLIFTS DON'T TAKE VACATION DAYS."

Butch – 360 Technician, ProLift, Cincinnati, Ohio

HELP IS ALWAYS HERE WITH TOYOTA 360 SUPPORT.

The industry's best and most comprehensive dealer network quickly delivers Toyota Certified Technicians to your work site. These specially trained technicians can also help assess your warehouse and facility needs to recommend the right equipment for the job. And with the largest fleet of material handling equipment, Toyota 360 keeps your business running at full speed.

ToyotaForklift.com/360-Support

TOYOTA 360 SUPPORT

YOUR BUSINESS IS RIDING ON IT.

Some product features described herein are optional. Please consult your dealer for specifications. Details of specifications and equipment are based on information available at time of printing and may change without notice.

STANDUPRIDERSS

©2021 Toyota Material Handling, Inc.